SN# 1202

MEASURED VALUES ARE IN INCHES

R.F.# 88824

REV	DESCRIPTION	DRAWN / APPROVED	DATE / DATE
	E.R. #8523		
A	ECO-8826 ROTATED ITEMS-1 & 4 90°	G. DAVIS / T. PAGE	04-OCT-2007 / 16-OCT-2007
B	ECO-8872 RELOCATED LEAD END, REVERSED ITEMS 3&4, ADDED FINISHED BORE, ADDED WIRING SCHEME, REVISED ALL NOTES	G. DAVIS / I. TERECHKINE	07-NOV-07 / 08-NOV-07
C	REV. ITEMS NO. 2 ECO NO. 9030	S.L. MEREDITH / T. PAGE	11-APR-2008 / 16-APR-2008
D	ECO-9136 NEW NOTE-4, OLD NOTES 4-6 - NOW NOTES 5-7, NEW NOTE-8, OLD NOTE-7 IS NOW NOTE-9	G. DAVIS / I. TERECHKINE	26-JUN-08 / 26-JUN-08
E	ECO-9214 REV. NOTE-1 ADDED REFERENCE NOTES.	G. DAVIS / [signature]	07-OCT-2008 / 10/9/08

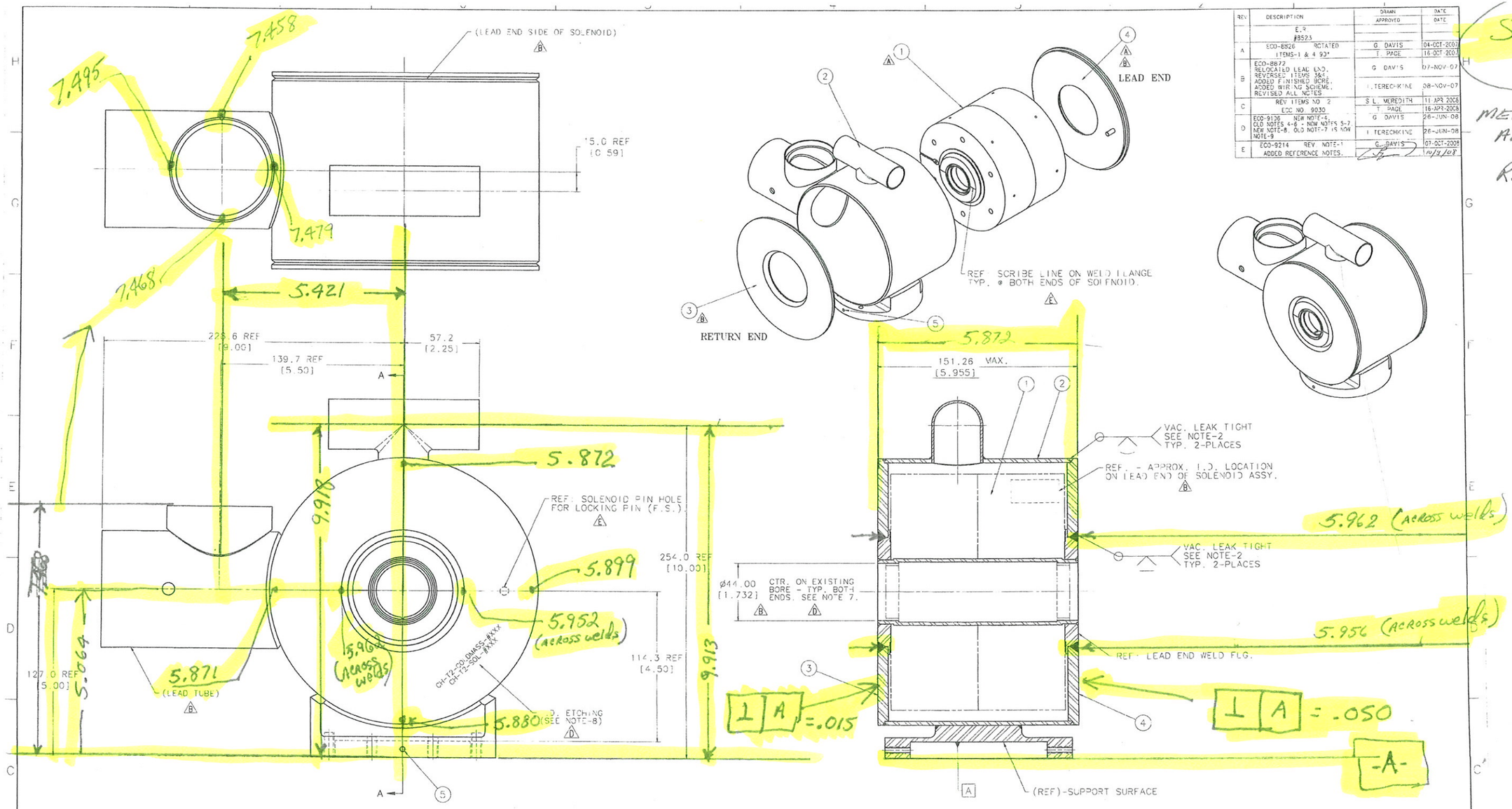

NOTES:

1. A) INSTALL SOLENOID ASSEMBLY INTO LHe VESSEL WITH PROPER LEAD SIDE LOCATION AS SHOWN.
   B) ADD BOTH END PLATES (ITEMS 3&4) WITH THE PIN OF THE LOCKING PLATE ENGAGING THE PIN HOLE ON THE LEAD END OF THE SOLENOID ASSEMBLY.
   C) ROTATE THE SOLENOID ASSEMBLY SO THAT SCRIBE LINE ON THE LEAD END WELD FLANGE IS PARALLEL TO THE SUPPORT POST MOUNTING BLOCK SURFACE (DATUM-A) WITHIN 1/2°. LEAD END LOCKING PLATE FLANGE IN PLACE (THIS WILL ESTABLISH THE VERTICAL PLANE OF THE DIPOLE CORRECTOR.)
2. ALL WELDS SHALL BE IN ACCORDANCE WITH THE ASME BOILER & PRESSURE VESSEL CODE (EXCEPT AS SHOWN), SECTION VIII, DIVISION 1. THE VESSEL NEED NOT BE CODE STAMPED, BUT SHALL BE CONSTRUCTED PER THE CODE, MAWP 42 PSI 20°C.
3. HI-POT ALL COILS TO 1000V. AND RING TEST.
4. He LEAK CHECK WELDED ASSEMBLY PER FERMI SPEC #ES-107240.
5. IN PREPARATION FOR COLD MASS TESTING - CONNECT THE WINDING OF THE SOLENOID ASSEMBLY AS SHOWN IN THE WIRING SCHEME AT LEFT.
6. PERFORM CRYTEST OF THE COLD-MASS IN ACCORDANCE WITH THE TEST REQUIREMENTS.
7. AFTER TESTING THE COLD-MASS - FINAL MACHINE THE INNER BORE OF THE LHe TUBE AS SHOWN IN THE CROSS-SECTION VIEW.
8. ETCH I.D. NO'S AT APPROX. LOCATION SHOWN IN 4mm MIN. HIGH CHARACTERS, AND RECORD NO'S ON REQUIRED PAPERWORK.
9. CLEAN & PACKAGE PER FERMI SPEC #ES-107222

PRIMARY DIMENSIONS ARE IN MM. - MV[IN]

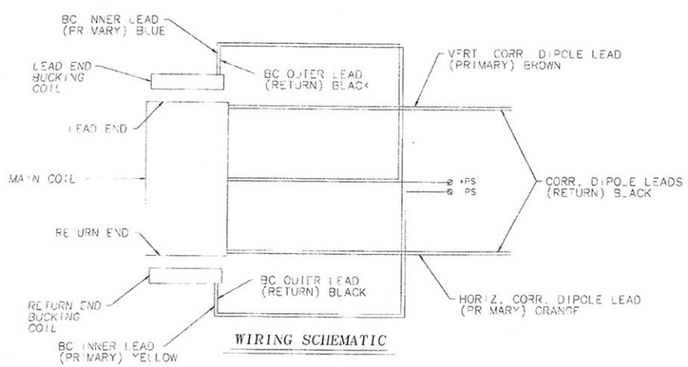

WIRING SCHEMATIC

TEM	PART NO.	DESCRIPTION OR SIZE	QTY
5	MA-393436	SET SCR #10-28X3/8" STN. STL.	2
4	MD-457117	HE VESSEL LOCK PLATE	1
3	ME-441949	HE VESSEL END PLATE	1
2	ME-457076	HE VESSEL SUB-ASSY (T-2)	1
1	ME-442657	SOLENOID ASSEMBLY (W/CORR. COILS)	1

PARTS LIST

UNLESS OTHERWISE SPECIFIED X	XX	ANGLES	ORIGINATOR	I. TERECHKINE	
± .5	± .13	±	DRAWN	G. DAVIS	27-JUN-2007
			CHECKED	J. BRANDT	28-JUN-2007
			APPROVED	J. BRANDT	28-JUN-2007

1. BREAK AL. SHARP EDGES
2. DO NOT SCALE DRAWING
3. DIMENSIONS BASED UPON ASME Y14.5M-1994
4. MAX. ALL MACH. SURFACES 125
5. DRAWING UNITS METRIC

USED ON: MD-457135

MATERIAL: SEE PARTS LIST

FERMI NATIONAL ACCELERATOR LABORATORY
UNITED STATES DEPARTMENT OF ENERGY

HINS - FRONT END
CH-SECTION FOCUSING SOLENOID
TYPE-2 COLD-MASS ASSEMBLY

SCALE	DRAWING NUMBER	SHEET	REV
1:1	5520.000-ME-442964	1 OF 1	E

CREATED WITH designmaster:es | GROUP TD/CCLS-BOSTON-COMPUTING

Created 08:19:26 on 08-10-08 (D-M-Y) By gadavis State: 1-INITIAL