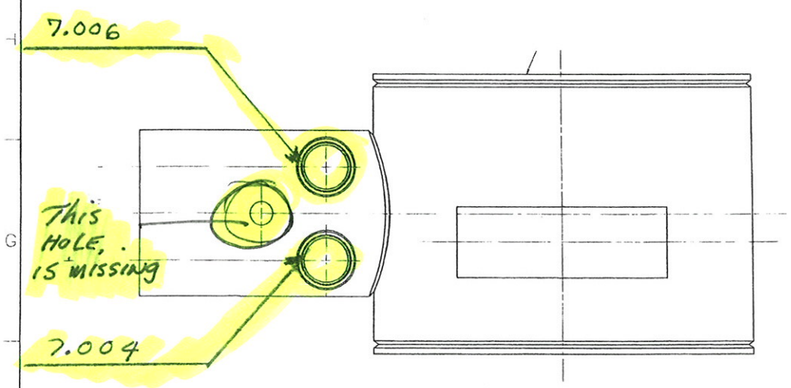

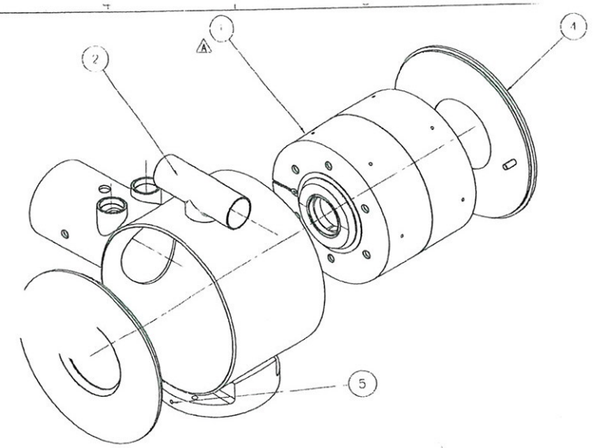

REV	DESCRIPTION	APPROVED	DATE
	F R 6523		
A	ECO 8876 ROTATED ITEMS-1 & 4 90°.	G DAVIS	04-OCT-2007
		T PAGE	10-OCT-2007
B	ECO-8892 RELOCATED LEAD ENC. REVERSED ITEMS 3&4. ADDED FINISHED BORE. ADDED WIRING SCHEME REVISED ALL NOTES	G DAVIS	15 NOV 07
		I TERECHKIN	16-NOV-07
C	REV ITEM NO 2 & NOTE NO 7 ECO NO 9010	S L MEREDITH	3-APR-2008
		T PAGE	8 APR 2008
D	ECO 9106 NEW NOTE-4, OLD NOTES 4-5&6 - NOW 5 6&7 NEW NOTE 8, OLD NOTE-7 IS NOW NOTE 9.	G DAVIS	26 JUN-08
		I TERECHKINE	26-JUN-08
E	REV. ITEM NO 2 ECO NO. 9116	S L MEREDITH	5-AUG-2008
		T PAGE	15 SEP-2008
F	ECO #9291 REVOVED (1) P.S. CHGD OUTER LEAD TO INNER	G DAVIS	21-JAN-2009
			Mar 22 09

Serial Number: 1111

#1 .3204
#2 .3191
#3 .3193
#4 .3205
#5 .3231
#6 .3233
#7 .3235
#8 .3219

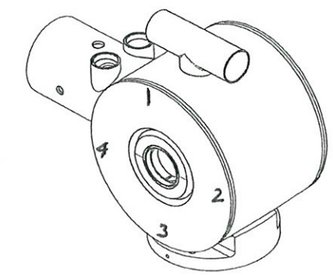

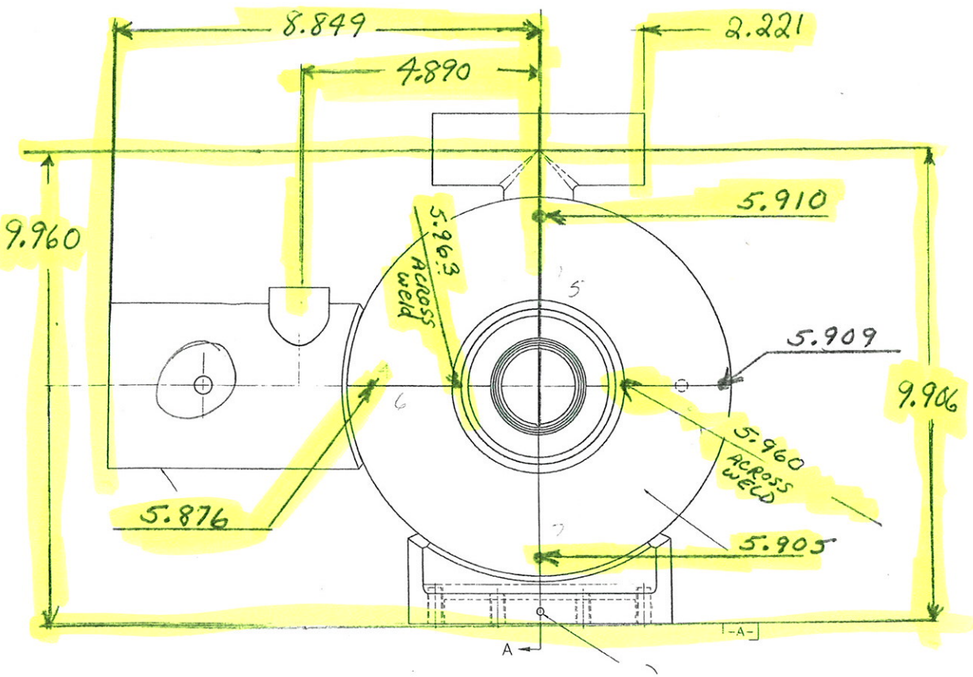

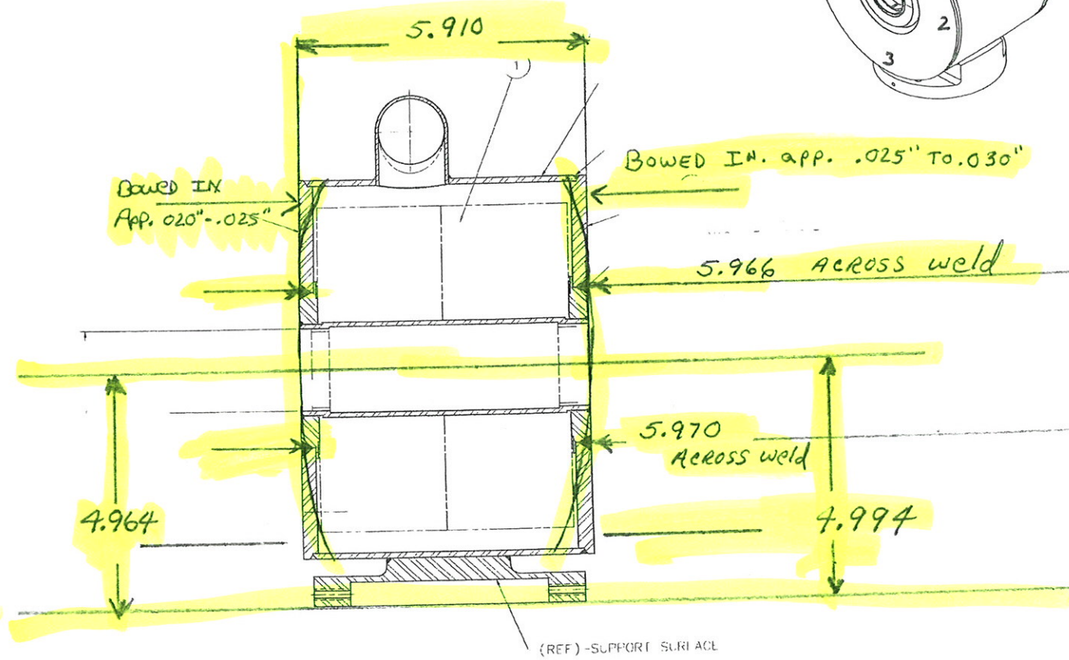

NOTES:

1 A) INSTALL SOLENOID ASSEMBLY INTO LHe VESSEL WITH PROPER LEAD SIDE LOCATION AS SHOWN.
B) ADD END PLATES (ITEMS 3&4) WITH THE PIN OF THE LOCKING PLATE ENGAGING THE LEAD END OF THE SOLENOID ASSEMBLY.
C) MATCH SCRIBE LINES EXIST ON THE PARTS, BUT ALIGNING IS NOT REQUIRED.
D) ROTATE THE SOLENOID ASSEMBLY INSIDE THE LHe VESSEL SO THAT THE LEADS ARE POINTED TOWARDS THE LEAD TUBE, AND POSITION THE SCRIBES TO BE PARALLEL TO THE MOUNTING BLOCK SURFACE (DATUM-A) AS SHOWN

2) COMPLETE WELDING NOTING THAT ALL WELDS SHALL BE IN ACCORDANCE WITH THE ASME BOILER & PRESSURE VESSEL CODE (EXCEPT AS SHOWN), SECTION VIII, DIVISION 1. THE VESSEL NEED NOT BE CODE STAMPED, BUT SHALL BE CONSTRUCTED PER THE CODE MAWP 42 PSI 20°C

3) HI-POT ALL COILS TO 1000V AND RING TEST.

4) He LEAK CHECK WELDED ASSEMBLY PER FERMI SPEC. #ES-107240

5) IN PREPARATION FOR COLD MASS TESTING - CONNECT THE WINDING OF THE SOLENOID ASSEMBLY WIRES AS SHOWN IN SCHEME AT RIGHT.

6) PERFORM CRYOTEST OF THE COLD MASS IN ACCORDANCE WITH THE TEST REQUIREMENTS

7) AFTER TESTING THE COLD MASS - FINAL MACHINE THE INNER BORE OF THE LHe TUBE AS SHOWN IN THE CROSS-SECTION VIEW

8) ETCH I.E. NO'S AT APPROX. LOCATION IN 4mm MIN HIGH CHARACTERS, AND RECORD NO'S ON REQUIRED PAPERWORK

9) CLEAN & PACKAGE PER FERMI SPEC. #ES-107222

PRIMARY DIMS ARE IN MM MM[IN].

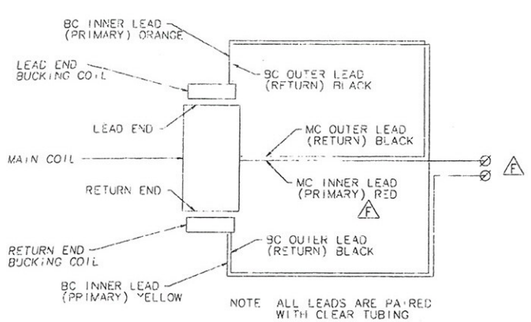

WIRE SCHEMATIC

ITEM	PART NO	DESCRIPTION OR S ZE	QTY
5	MA-393436	SET SCR. #10-28X3/8" STN STL.	2
4	MD-457117	LOCK PLATE ASSEMBLY	1
3	ME-441949	HE VESSEL END PLATE	1
2	ME-441940	HE VESSEL SUB-ASSEMBLY	1
1	ME-442761	SOLENOID ASSEMBLY	1

PARTS LIST

ORIGINATOR	I TERECHKINE	
DRAWN	G DAVIS	27-JUN-2007
CHECKED	J BRANDT	28-JUN-2007
APPROVED	J BRANDT	28-JUN-2007
USED ON	MD-457134	
MATERIAL	SEE PARTS LIST	

UNLESS OTHERWISE SPECIFIED: X ± .5; XX ± .13; ANGLES ± 1°
1 BREAK ALL SHARP EDGES .1 MAX
2 DO NOT SCALE DRAWING DIMENSIONS BASED UPON ASME Y14.5M-1994
4 MAX ALL MACH SURFACES 125/
3 MARKING UNITS METRIC

FERMI NATIONAL ACCELERATOR LABORATORY
UNITED STATES DEPARTMENT OF ENERGY

HINS - FRONT END
CH-SECTION FOCUSING SOLENOID
TYPE-1 COLD-MASS ASSEMBLY

SCALE 1:1 | DRAWING NUMBER 5520.000-ME-442963 | SHEET 1 OF 1 | REV F

CREATED WITH Idea(s)/VX/Series | UNCLAP TD/DCCIS-DESIGN-COMPUTING

Created 07:57:37 on 26-Oct-09 (D-M-Y) By yadavins State 1-INITIAL