REV	DESCRIPTION	DRAWN / APPROVED	DATE
	E R #6523		
A	ECO 8826 ROTATED ITEMS-1 & 4 90°	G DAVIS T PAGE	04-OCT-2007 10-OCT-2007
B	ECO-8892 RELOCATED LEAD END. REVERSED ITEMS 3&4. ADDED FINISHED BORE. ADDED WIRING SCHEME REVISED ALL NOTES	G DAVIS	15 NOV 07
		I TERTCHKINE	16-NOV-07
C	REV ITEM NO 2 & NOTE NO 2 ECO NO 9010	S L MEREDITH T PAGE	3-APR-2008 8 APR-2008
D	ECO 9196 REV NOTE-4, OLD NOTES 4-5&6 - NOW 5 6&7. NEW NOTE 8. OLD NOTE-7 IS NOW NOTE 9.	G DAVIS	26 JUN-08
		I TERTCHKINE	26-JUN-08
E	REV. ITEM NO 2 ECO NO. 9116	S L MEREDITH T. PAGE	5-AUG-2008 15-SEP-2008
F	ECO #9291 REMOVED (+) P S. CHGD OUTER LEAD TO INNER	G DAVIS	21-JAN-2009

Serial Number: 1110

#1 .3189
#2 .3209
#3 .3233
#4 .3218
#5 .3240
#6 .3233
#7 .3230
#8 .3236

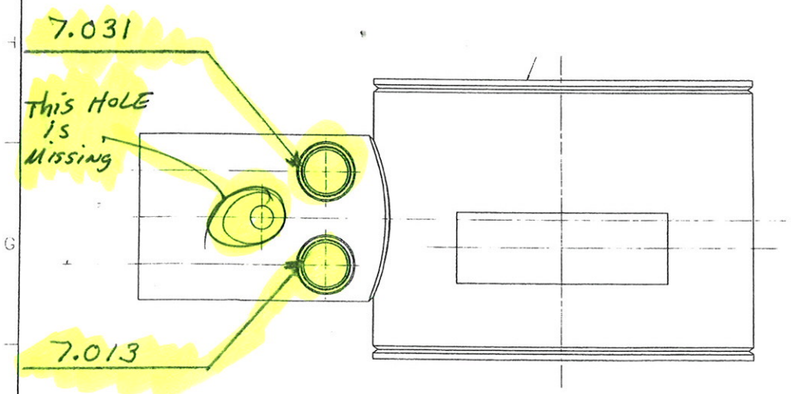

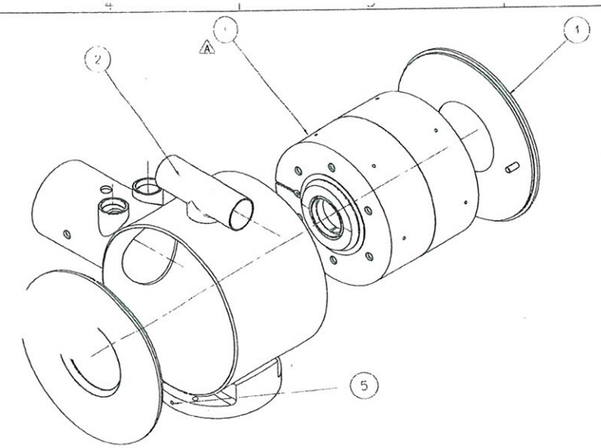

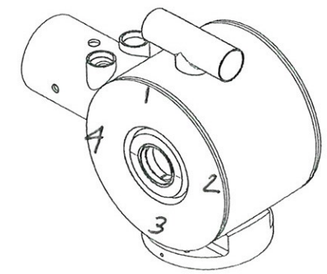

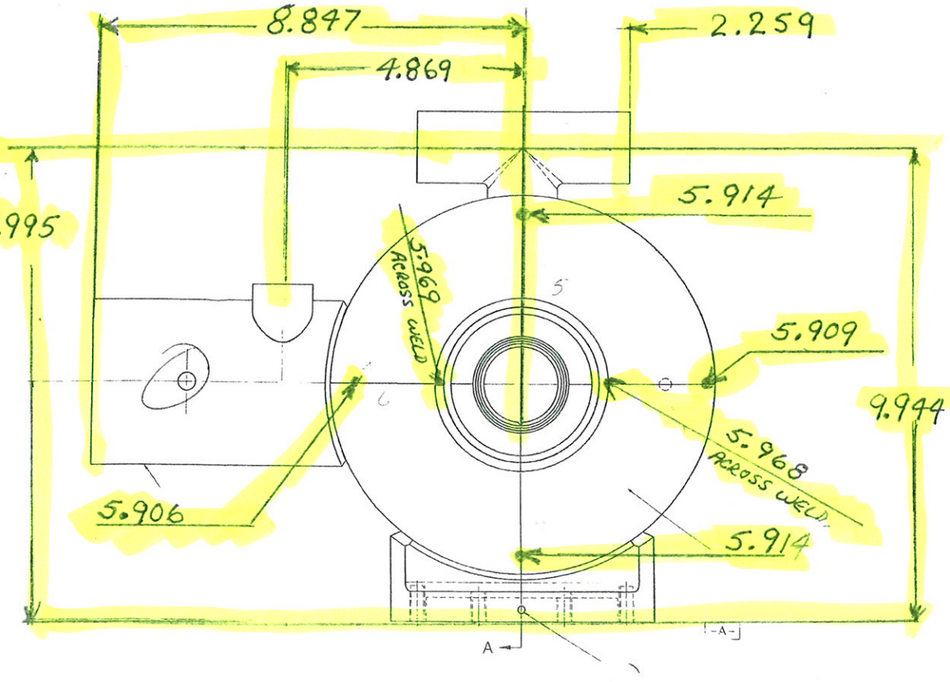

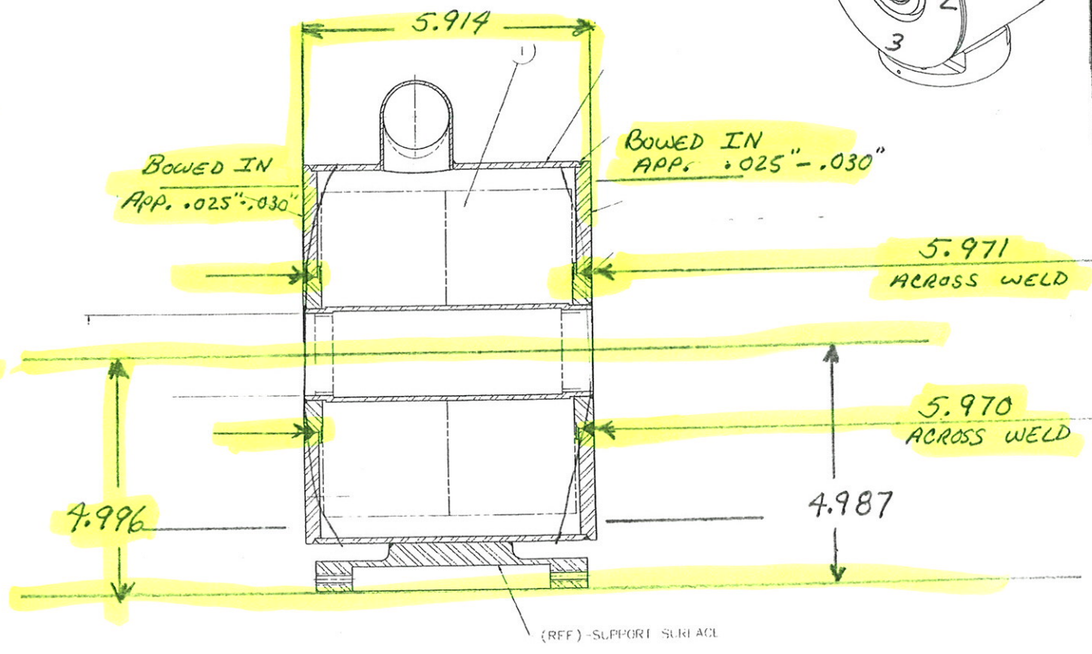

NOTES:

1 A) INSTALL SOLENOID ASSEMBLY INTO LHe VESSEL WITH PROPER LEAD SIDE LOCATION AS SHOWN.
B) ADD END PLATES (ITEMS 3&4) WITH THE PIN OF THE LOCKING PLATE ENGAGING THE LEAD END OF THE SOLENOID ASSEMBLY.
C) MATCH SCRIBE LINES EXIST ON THE PARTS, BUT ALIGNING IS NOT REQUIRED.
D) ROTATE THE SOLENOID ASSEMBLY INSIDE THE LHe VESSEL SO THAT THE LEADS ARE POINTED TOWARDS THE LEAD TUBE, AND POSITION THE SCRIBES TO BE PARALLEL TO THE MOUNTING BLOCK SURFACE (DATUM-A) AS SHOWN

2) COMPLETE WELDING NOTING THAT ALL WELDS SHALL BE IN ACCORDANCE WITH THE ASME BOILER & PRESSURE VESSEL CODE (EXCEPT AS SHOWN), SECTION VIII, DIVISION 1. THE VESSEL NEED NOT BE CODE STAMPED, BUT SHALL BE CONSTRUCTED PER THE CODE MAWP 42 PSI 20°C

3) HI-POT ALL COILS TO 1000V AND RING TEST.

4) He LEAK CHECK WELDED ASSEMBLY PER FERMI SPEC. #ES-107240

5) IN PREPARATION FOR COLD MASS TESTING - CONNECT THE WINDING OF THE SOLENOID ASSEMBLY WIRES AS SHOWN IN SCHEME AT RIGHT

6) PERFORM CRYOTEST OF THE COLD MASS IN ACCORDANCE WITH THE TEST REQUIREMENTS

7) AFTER TESTING THE COLD MASS - FINAL MACHINE THE INNER BORE OF THE LHe TUBE AS SHOWN IN THE CROSS-SECTION VIEW

8) ETCH I.E. NO'S AT APPROX. LOCATION IN 4mm MIN. HIGH CHARACTERS, AND RECORD NO'S ON REQUIRED PAPERWORK

9) CLEAN & PACKAGE PER FERMI SPEC. #ES-107222

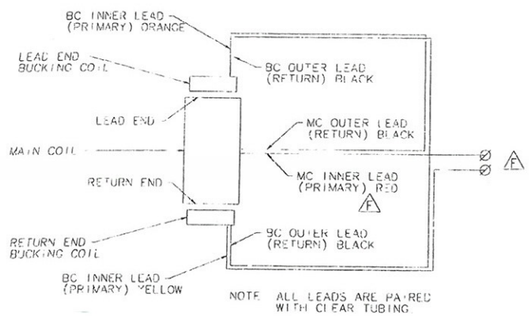

NOTE ALL LEADS ARE PAIRED WITH CLEAR TUBING

WIRE SCHEMATIC

PRIMARY DIMS ARE IN MM MM[IN]

ITEM	PART NO	DESCRIPTION OR SIZE	QTY
5	VA-393436	SET SCR. #10-28X3/8" STN STL.	2
4	MD 457117	LOCK PLATE ASSEMBLY	1
3	ME-441949	HE VESSEL END PLATE	1
2	ME-441940	HE VESSEL SUB ASSEMBLY	1
1	ME-442761	SOLENOID ASSEMBLY	1

PARTS LIST

UNLESS OTHERWISE SPECIFIED				ORIGINATOR	I TERCHKINE	
X	XX	ANGLES		DRAWN	G DAVIS	27-JUN-2007
± .5	± .13	±		CHECKED	J BRANDT	28-JUN-2007
				APPROVED	J BRANDT	28-JUN-2007
1 BREAK ALL SHARP EDGES MAX 2 DO NOT SCALE DRAWING 3 DIMENSIONS EXCEPT UPON ASME Y14.5M-1994. 4 MAX ALL MACH SURFACES 125 √ 5 DRAWING UNITS METRIC				USED ON	MD-457134	
				MATERIAL	SEE PARTS LIST	

FERMI NATIONAL ACCELERATOR LABORATORY
UNITED STATES DEPARTMENT OF ENERGY

HINS - FRONT END
CH-SECTION FOCUSING SOLENOID
TYPE-1 COLD-MASS ASSEMBLY

SCALE	DRAWING NUMBER	SHEET	REV
1:1	5520.000-ME-442963	1 OF 1	F

CREATED WITH Pro/ENGINEER WIDFS | GROUP TD/DOCUS-DESIGN-COMPUTING

Created 07 57 32 on 26-Oct 09 (D M-Y) By gotlavin State 1-INITIAL