SOCKET CAP, SHOULDER AND SET SCREWS

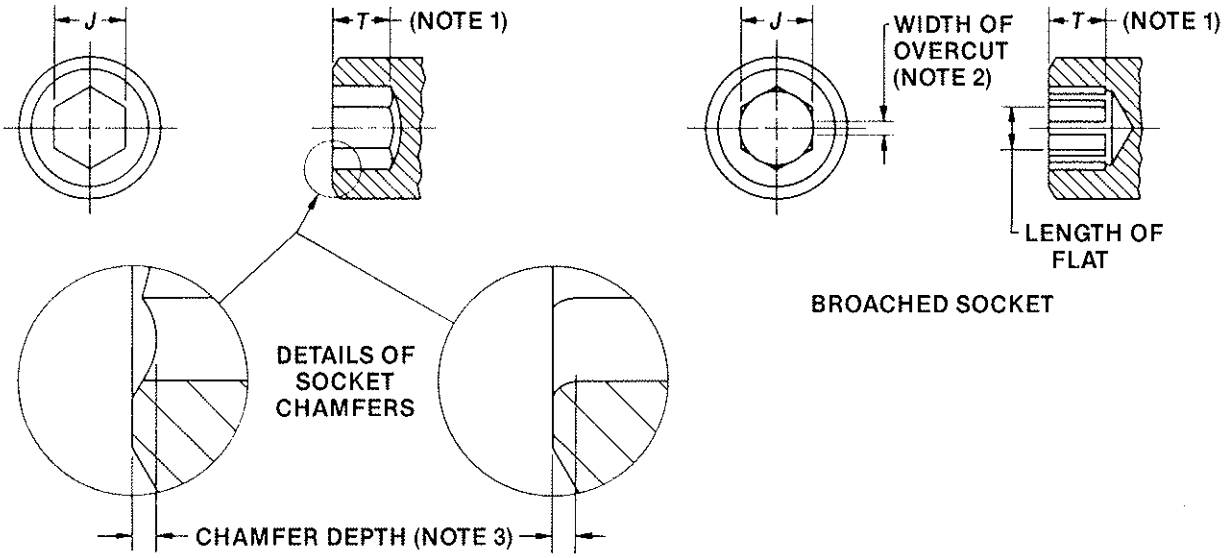

Table 6 Dimensions of Hexagon Sockets

Nominal Socket Size		J Socket Width Across Flats		Nominal Socket Size		J Socket Width Across Flats		Nominal Socket Size		J Socket Width Across Flats	
		Max	Min			Max	Min			Max	Min
	0.028	0.0285	0.0280	3/16	0.188	0.1900	0.1875	7/8	0.875	0.8850	0.8750
	0.035	0.0355	0.0350	7/32	0.219	0.2217	0.2187	1	1.000	1.0200	1.0000
	0.050	0.0510	0.0500	1/4	0.250	0.2530	0.2500	1 1/4	1.250	1.2750	1.2500
1/16	0.062	0.0635	0.0625	5/16	0.312	0.3160	0.3125	1 1/2	1.500	1.5300	1.5000
5/64	0.078	0.0791	0.0781	3/8	0.375	0.3790	0.3750	1 3/4	1.750	1.7850	1.7500
3/32	0.094	0.0952	0.0937	7/16	0.438	0.4420	0.4375	2	2.000	2.0400	2.0000
7/64	0.109	0.1111	0.1094	1/2	0.500	0.5050	0.5000	2 1/4	2.250	2.2950	2.2500
1/8	0.125	0.1270	0.1250	9/16	0.562	0.5680	0.5625	2 3/4	2.750	2.8050	2.7500
9/64	0.141	0.1426	0.1406	5/8	0.625	0.6310	0.6250	3	3.000	3.0600	3.0000
5/32	0.156	0.1587	0.1562	3/4	0.750	0.7570	0.7500				

NOTES:

1. Applicable socket depths are specified in the dimensional tables and notes for the respective screw types.
2. For broached sockets, the maximum acceptable overcut shall be a size causing an average 20 percent flat length reduction in the maximum dimension across flat hexagon for socket sizes up to and including 1 in., and 30 percent for larger sockets. The maximum overcut on any one of the six flats shall not exceed a 40 percent reduction in flat length for any size socket.
3. Where hexagon sockets are chamfered, the depth of chamfer shall not exceed 10 percent of the nominal socket size for sizes up to and including 1/16 in., and 7.5 percent for larger sizes. For chamfered sockets, it is permissible for the NOT GO socket gage to enter to the depth of chamfer as specified in Appdx. I, page G-27.
4. Sockets up to and including 1 in. nominal size shall be checked in accordance with the hexagon socket gages and gaging specified in Appdx. I. Suitability of larger sockets shall be determined by means of direct measurement for various technical and economic reasons.
5. Dimensions of sockets apply before plating. When plated, see para. 2.1 of General Data for gaging.
6. For additional requirements, see Introductory Notes and General Data, page G-I.