REV	DESCRIPTION	DRAWN	DATE
		APPROVED	DATE
	ER# 10165	D. MITCHELL	9-19-11
	NEW RELEASE		

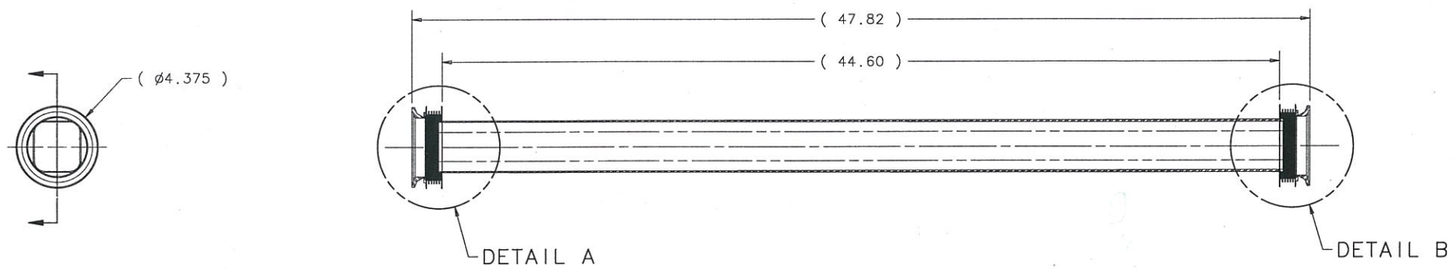

OK for Production

Magnet Series	
Magnet Numbers	BKED-TS-002
Comments	
Approved	Date
	9/27/11

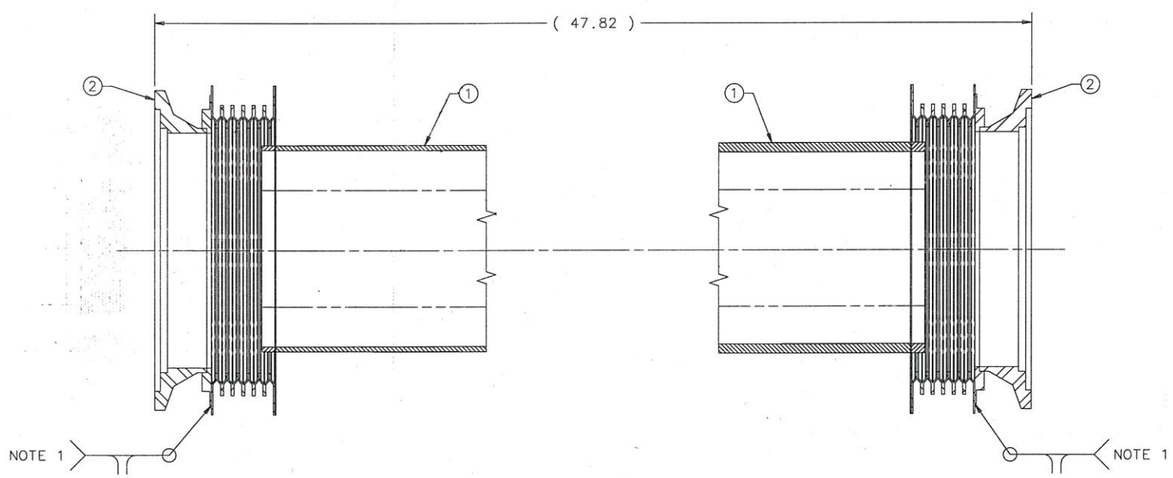

DETAIL A
SCALE 1/1

DETAIL B
SCALE 1/1

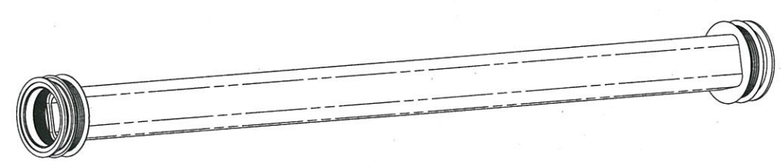

NOTES: (UNLESS OTHERWISE SPECIFIED)

1. WELD JOINTS TO BE VACUUM TIGHT. NO LEAK SHALL BE DETECTABLE ON THE MOST SENSITIVE SCALE OF A HELIUM LEAK DETECTOR. LEAK RATE TO BE LESS THAN 10^{-10} STD. CC/SEC.

ITEM	PART NO.	DESCRIPTION OR SIZE	QTY.
2	MC-400725	KICKER CONFLAT-ADAPTER WELD.	2
1	MD-400722	KICKER BT SUB-ASSY TYPE 1	1

PARTS LIST

UNLESS OTHERWISE SPECIFIED			ORIGINATOR		
.XX	.XXX	ANGLE	DRAWN	D. MITCHELL	9-19-2011
± --	± ---	±	CHECKED	D. ARNOLD	9-20-2011
			APPROVED	S. MAKAROV	9-20-2011

1. BREAK ALL SHARP EDGES .03 MAX.
2. DO NOT SCALE DRAWING.
3. DIMENSIONS BASED UPON
4. MAX. ALL MACH. SURFACES 125
5. DRAWING UNITS: IN

USED ON

MATERIAL
SEE PARTS LIST

FERMI NATIONAL ACCELERATOR LABORATORY
UNITED STATES DEPARTMENT OF ENERGY

BOOSTER
KICKER MAGNET
BEAM TUBE WELDMENT

SCALE	DRAWING NUMBER	SHEET	REV
1:4 AS NOTED	5520.000-MD-412515	1 OF 1	

CREATED WITH : GROUP: TD-TDM

Created: 16:53:36 on 20-09-11 (D-M-Y) By: dmitchel State: 1-INITIAL