REV.	DESCRIPTION	DRAWN / APPD.	DATE / DATE
	ER #7274		

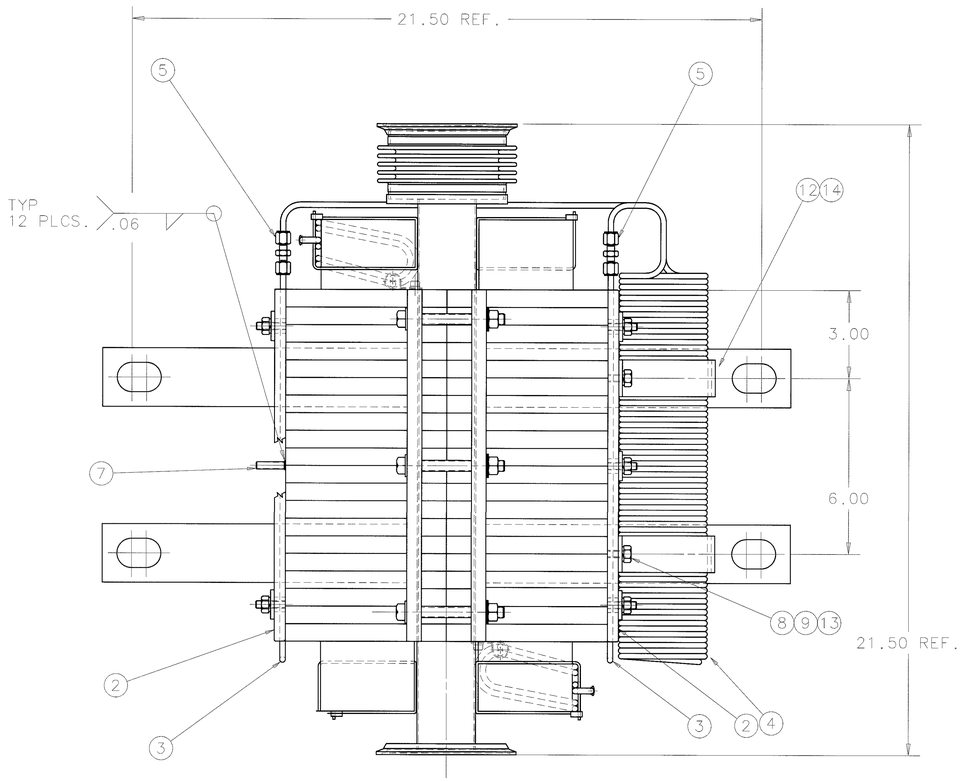

NOTES:

1. THE MAGNET IS TO BE REWORKED FROM NUMI IDHR ROLLED TRIM DIPOLE,ME-388515.
2. USING THE COOLING PLATE,ITEM 2,AS A TEMPLATE,LOCATE AND MARK THE POSITIONS FOR THE THREADED RODS,ITEM 7. REMOVE PLATE AND WELD THE RODS IN PLACE. REPEAT ON OPPOSITE SIDE AS SHOWN.
3. INSTALL THE COOLING TUBES,ITEM 3,ON THE COOLING PLATES. SPRAY THE MATING SURFACES OF THE PLATES AND THE CORE WITH KRYLON,ITEM 6.
4. INSTALL THE COOLING PLATES AS SHOWN WITH THE WASHERS AND HEX NUTS,ITEMS 8,9 & 10. TORQUE TO 5 FT.-LBS.
5. PAINT THE EXPOSED SURFACES OF THE COOLING PLATES WITH BLACK PAINT.
6. INSTALL THE WATER FLOW REDUCER COILS,ITEM 4,USING THE PIPE STRAPS,ITEM 12,CUSHION STRIP,ITEM 14 AND TUBE FITTINGS,ITEM 5. BEND AND TRIM TUBING AS NECESSARY TO KEEP THE FITTINGS AS CLOSE TO THE CORE AS REASONABLY POSSIBLE.
7. STENCIL MAGNET INFORMATION ON THE COOLING PLATE OPPOSITE THE REDUCER COIL LOCATION AS SHOWN. APPLY MAGNET IDENTIFICATION LABEL AS SHOWN.
8. MAGNET WEIGHT APPROX. 450 LBS.
   MAGNET MUST MEET FOLLOWING SPEC REQUIREMENTS:

ELECTRICAL:

DC HIPOT 1.5 KV,1 MINUTE	<5 MICROAMPS
RING TEST	------
DC COIL RESISTENCE	2.2 - 2.4 OHMS

WATER FLOW:

AT 100 PSI	.264 GPM
AT 60 PSI	.185 GPM

PRESSURE TEST: 500 PSI FOR 30 MINUTES, NO VISIBLE LEAKS SHALL BE DETECTED.

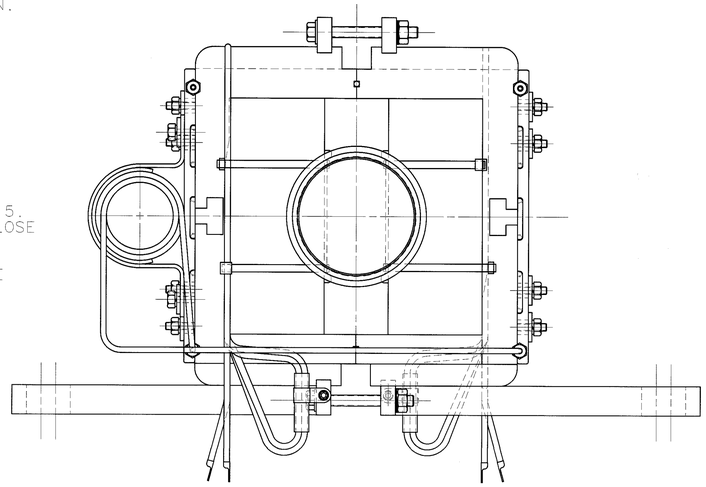

SECTION A-A

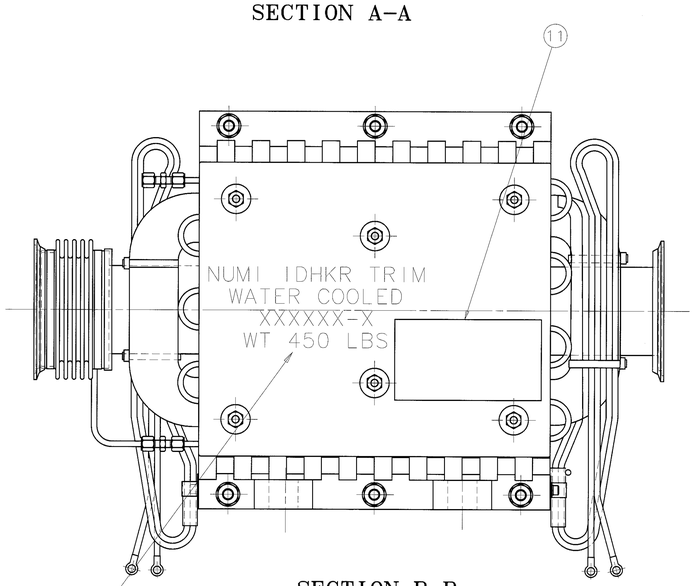

SECTION B-B

Ø1/4-20UNC THRU
ITEM 2-TYP.
4 HOLES
NOTE: LOCATE USING PIPE
STRAP AS TEMPLATE.
ADJUST POSITION VERTICALLY
AS REQUIRED TO AVOID
COOLING TUBES
(SEE NOTE 6)

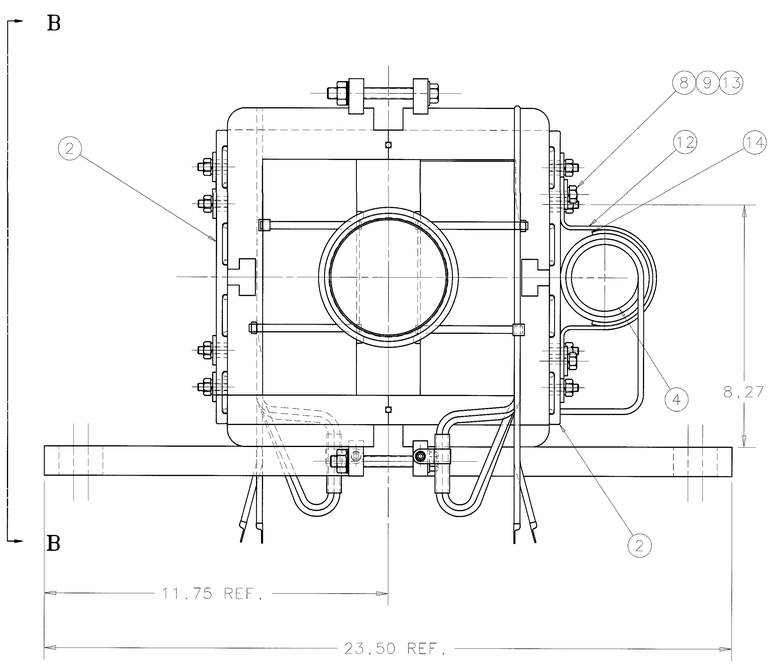

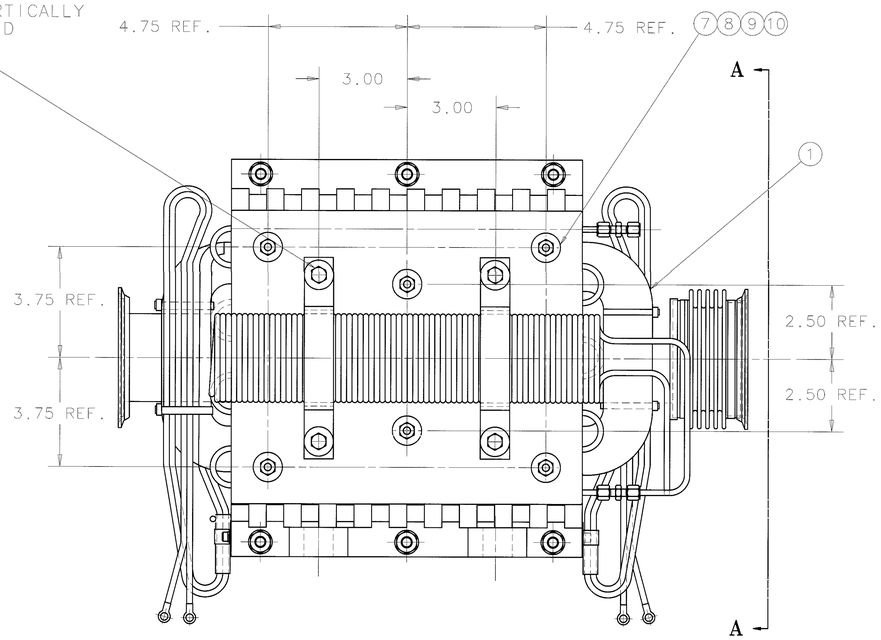

STENCIL MAGNET NAME SERIAL NUMBER,AND MAGNET WEIGHT WITH WHITE PAINT IN 1" HIGH CHARACTERS IN CENTER OF CORE, AS SHOWN.

ITEM	PART NO.	DESCRIPTION OR SIZE	QTY.
14	MA-388622	CUSHION STRIP	2
13	MA-263812	CAP SCR. 1/4-20 X 5/8" LG.	4
12	MA-388618	PIPE STRAP	2
11	MA-318490	MAG. IDENTIFICATION LABEL	1
10	MA-176438	NUT,HEX 1/4-20NC STL	12
9	MA-263804	1/4" REGULAR SPLIT LOCKWASHER	16
8	MA-388596	FLAT WASHER 9/32 X 1.00	16
7	MA-388597	THREADED ROD 1/4-20 X 1.00	12
6	MA-388598	KRYLON PROTECTIVE SPRAY	A/R
5	MA-388595	TUBE FITTING(3-3HBZ)	4
4	MC-388590	WATER FLOW REDUCER	1
3	MC-388589	COOLING TUBE	2
2	MC-388586	COOLING PLATE	2
1	MD-388515	ROLLED HORIZONTAL TRIM MAGNET	1

PARTS LIST

UNLESS OTHERWISE SPECIFIED			ORIGINATOR		
.XX	.XXX	ANGLES	DRAWN	JABLONSKI	5-22-03
±.02	±.010	±.5°	CHECKED		
			APPROVED		6/20/03
			USED ON		
			MATERIAL	SEE LIST	

1. BREAK ALL SHARP EDGES .02 MAX.
2. DO NOT SCALE DRAWING.
3. DIMENSIONS BASED UPON ANSI Y14.5M-1982
4. MAX. ALL MACH. SURFACES 125√

FERMI NATIONAL ACCELERATOR LABORATORY
UNITED STATES DEPARTMENT OF ENERGY

NUMI
WATER COOLED ROLLED
HORIZONTAL TRIM DIPOLE MAGNET(IDHKR)
ASSEMBLY

SCALE	FILMED	DRAWING NUMBER	REV.
1/2		5520-ME-388592	

CREATED WITH I-DEAS MS-5 | USER NAME: jablon

INCHES 0 1 2 3 4 5 6
METRIC 0 10 20 30 40 50 60 70 80 90 100 110 120 130 140 150