REV	DESCRIPTION	DRAWN / APPROVED	DATE / DATE
--	ER # 9949 NEW RELEASE		
A	ECO# 9979; MATERIAL WAS SS CHANGED TO Ti-6Al-4V GRADE 5	J.COGHILL R.BOSSERT	14-FEB-2011 14-FEB-2011
B	ECO# 10009; ø5.610 WAS ø5.110; ø9.525 WAS ø8.200	J.COGHILL F.NOBREGA	30-MAR-2011 06-APR-2011
C	ECO# 10106; 33.15 WAS 33.38; 12.26 WAS 30.00;42.26 WAS 60.00; 95.14 WAS 112.88; 151.44 WAS 169.18;182.41 WAS 200.14; 157.04 WAS 179.03; 21.2 WAS 21.32; 34.81 WAS 35.05; 50.18 WAS 50.41; REMOVED 21.05 & 13.69; ADDED CHAMFER	J.COGHILL F.NOBREGA	28-JUL-2011 08-AUG-2011
D	ECO# 10140; 46.3 WAS 42.26; 16.3 WAS 12.26; 99.18 WAS 95.14; 154.44 WAS 151.44; 186.45 WAS 182.41; 158.08 WAS 157.04; SCALE WAS 2:1	J.COGHILL	06-OCT-2011

DRAFT

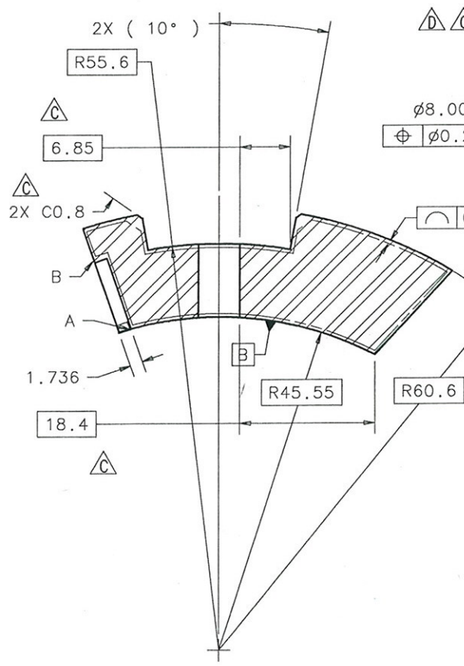

SECTION A-A
SCALE 2:1

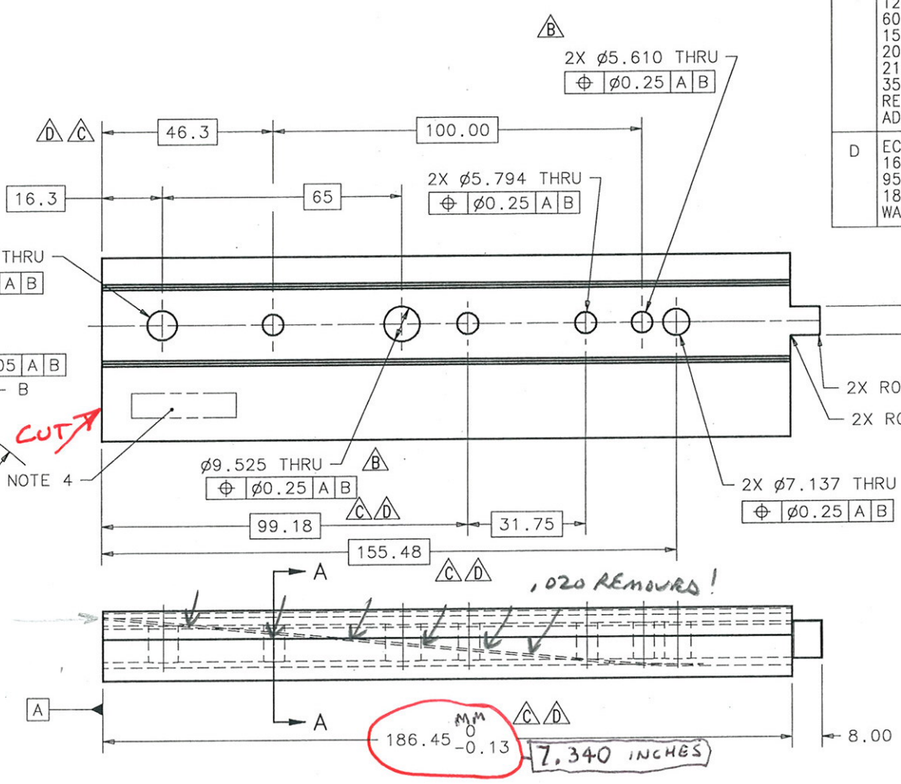

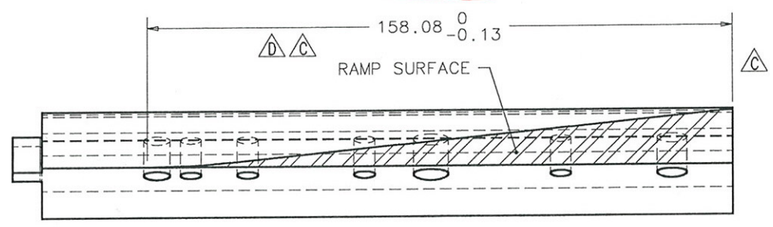

VIEW B-B

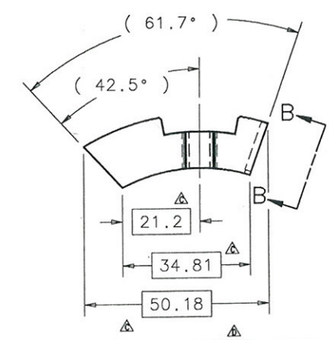

NOTES (UNLESS OTHERWISE SPECIFIED):

1. PART MUST BE FREE OF DIRT, GREASE, OIL AND CHIPS.
2. PART TO BE FREE OF ALL SHARP EDGES, CORNERS, AND BURRS.
3. TRAILING ZEROS ON DIMENSIONS DENOTE TOLERANCE.
4. SIX DIGIT PART NUMBER SHALL BE ENGRAVED, ETCHED, OR LASER MARKED IN THIS LOCATION WITH 1/8" HIGH CHARACTERS.

UNLESS OTHERWISE SPECIFIED			ORIGINATOR	F.NOBREGA	21-DEC-2010
0.XX	0.XXX	ANGLES	DRAWN	J.KURNAT	21-DEC-2010
± 0.25	± 0.127	±0.5°	CHECKED	D.ARNOLD	03-FEB-2011
			APPROVED	F.NOBREGA	03-FEB-2011

1. BREAK ALL SHARP EDGES 0.5 MAX.
2. DO NOT SCALE DRAWING.
3. DIMENSIONS BASED UPON ASME Y14.5M-1994
4. MAX. ALL MACH. SURFACES 1.6
5. DRAWING UNITS: METRIC

USED ON: ME-482182

MATERIAL (A): TITANIUM Ti-6Al-4V GRADE 5

FERMI NATIONAL ACCELERATOR LABORATORY
UNITED STATES DEPARTMENT OF ENERGY

LHC 11-TESLA DIPOLE COIL ASSEMBLY POLE OUTER JUMP FNAL

SCALE	DRAWING NUMBER	SHEET	REV
1:1 & AS NOTED	5520.000-MC-482188	1 OF 1	D

CREATED WITH : Ideas12NXSeries | GROUP: TD/DDCIS-DESIGN-COMPUTING