SN # 1205

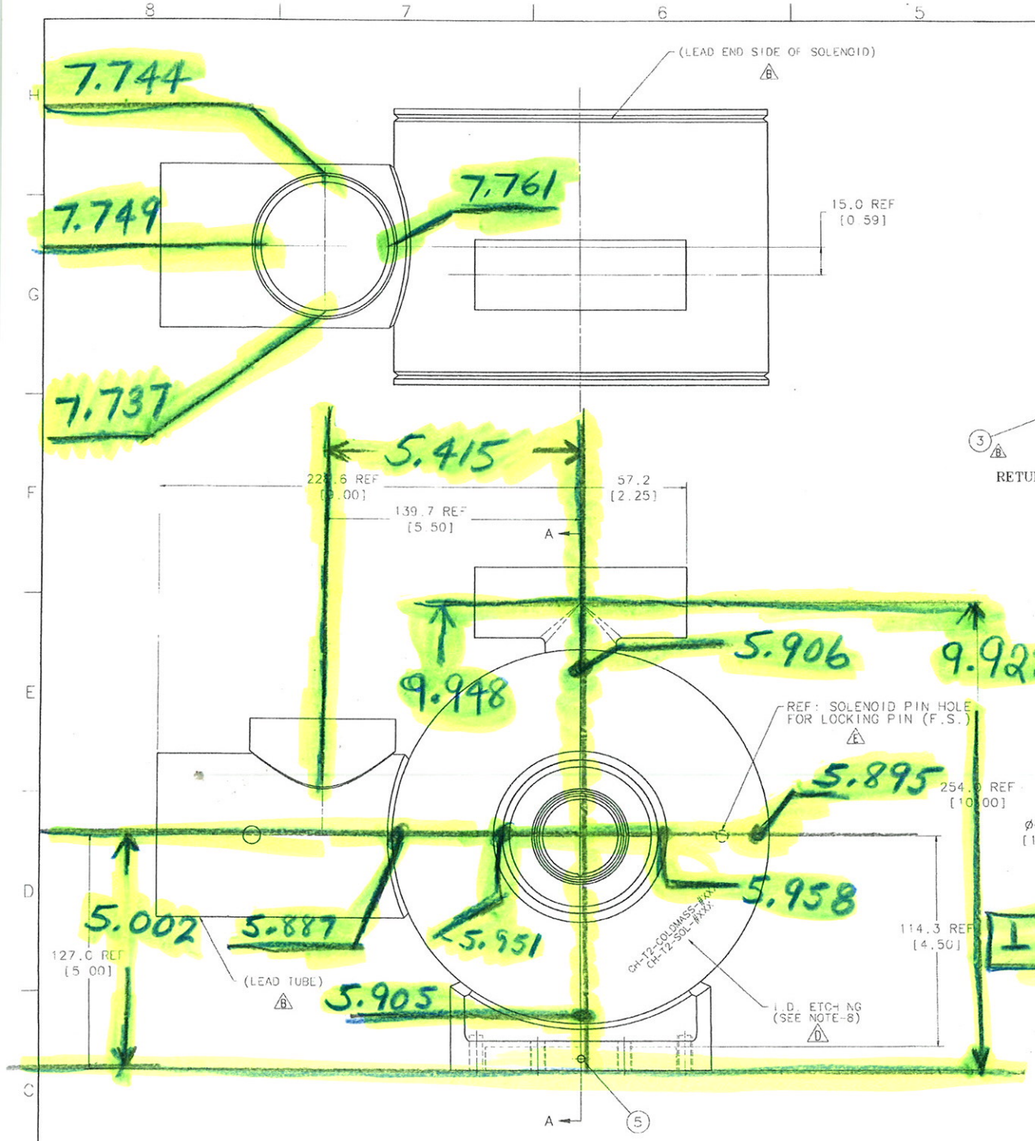

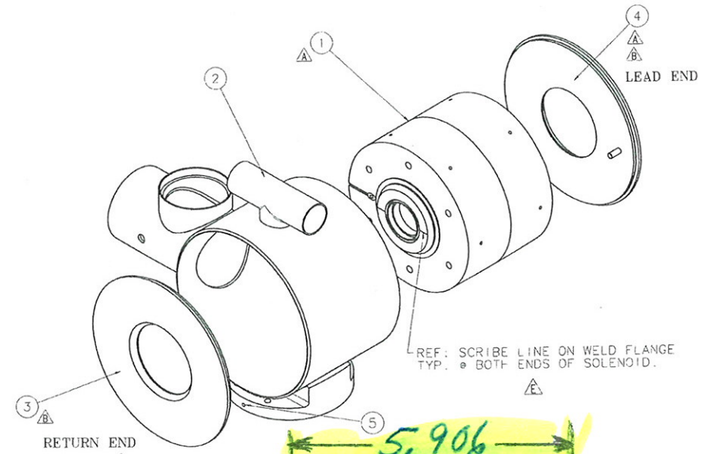

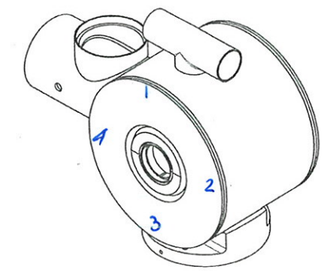

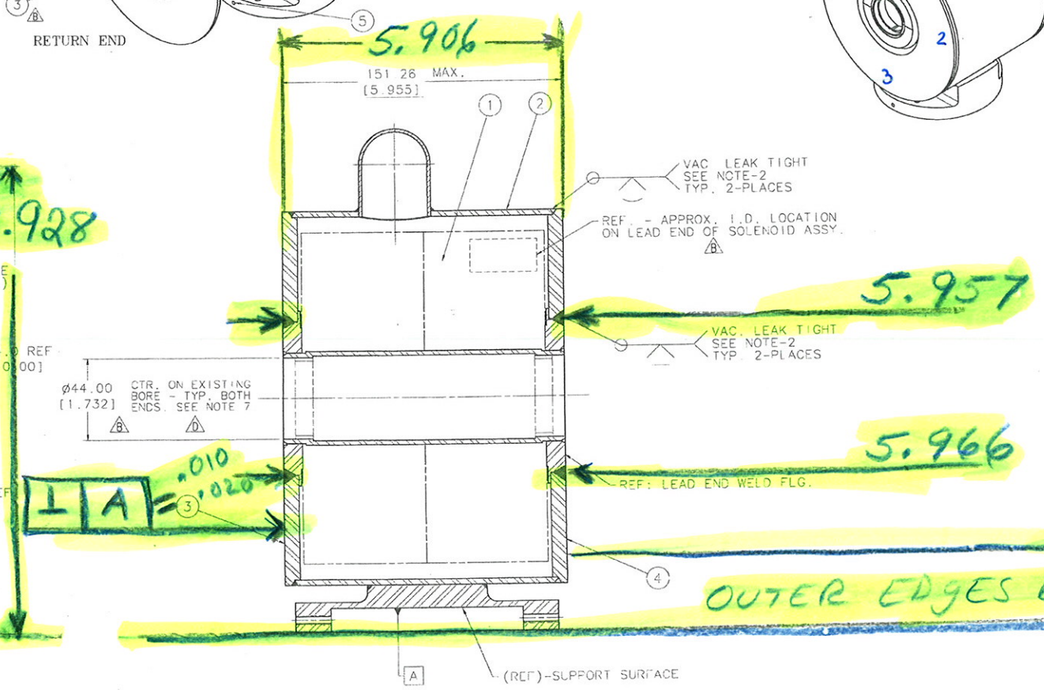

REV	DESCRIPTION	DRAWN / APPROVED	DATE
	E.R. #8523		
A	ECO-8826 ROTATED ITEMS-1 & 2 90°	G. DAVIS / I. PAGE	04-OCT-2007 / 15-OCT-2007
B	ECO-8872 RELOCATED LEAD END REVERSED ITEMS 3&4 ADDED FINISHED BORE ADDED WIRING SCHEME REVISED ALL NOTES	G. DAVIS / I. TERECHKINE	07-NOV-07 / 08-NOV-07
C	REV. ITEMS NO. 2 ECO NO. 9030	S.L. MEREDITH / T. PAGE	11-APR-2008 / 15-APR-2008
D	ECO-9105 NEW NOTE-4, OLD NOTES 4-6 - NOW NOTES 5-7, NEW NOTE-8, OLD NOTE-7 IS NOW NOTE-9	G. DAVIS / I. TERECHKINE	26-JUN-08 / 26-JUN-08
E	ECO-9214 REV. NOTE-1, ADDED REFERENCE NOTES.	G. DAVIS / I. TERECHKINE	07-OCT-2008 / 09-OCT-2008
F	ECO-9391 REV. NOTE 10, REMOVED (±) F.S. CHANGED M.C. OUTER (RED) TO INNER	G. DAVIS /	21-JAN-2009 / Jan. 22, 09

NOTES: A B D E

1. A) INSTALL SOLENOID ASSEMBLY INTO LHe VESSEL WITH PROPER LEAD SIDE LOCATION AS SHOWN
   B) ADD BOTH END PLATES (ITEMS 3&4) WITH THE PIN OF THE LOCKING PLATE ENGAGING THE PIN HOLE ON THE LEAD END OF THE SOLENOID ASSEMBLY
   F C) ROTATE THE SOLENOID ASSEMBLY SO THAT SCRIBE LINE ON THE LEAD END WELD FLANGE IS PARALLEL TO THE SUPPORT POST MOUNTING BLOCK SURFACE (DATUM-A) WITHIN 1/2° (THIS WILL ESTABLISH THE VERTICAL PLANE OF THE DIPOLE CORRECTOR.) TACK WELD BOTH END PLATE FLANGES IN PLACE
2. ALL WELDS SHALL BE IN ACCORDANCE WITH THE ASME BOILER & PRESSURE VESSEL CODE (EXCEPT AS SHOWN), SECTION VIII, DIVISION 1. THE VESSEL NEED NOT BE CODE STAMPED, BUT SHALL BE CONSTRUCTED PER THE CODE, MAWP 42 PSI 20°C.
3. HI-POT ALL COILS TO 1000V. AND RING TEST
4. He LEAK CHECK WELDED ASSEMBLY PER FERMI SPEC. #ES-107240.
5. IN PREPARATION FOR COLD MASS TESTING - CONNECT THE WINDING OF THE SOLENOID ASSEMBLY AS SHOWN IN THE WIRING SCHEME AT LEFT
6. PERFORM CRYTEST OF THE COLD-MASS IN ACCORDANCE WITH THE TEST REQUIREMENTS.
7. AFTER TESTING THE COLD-MASS - FINAL MACHINE THE INNER BORE OF THE LHe TUBE AS SHOWN IN THE CROSS-SECTION VIEW.
8. ETCH I.D. NO'S AT APPROX. LOCATION SHOWN IN 4mm MIN. HIGH CHARACTERS, AND RECORD NO'S ON REQUIRED PAPERWORK.
9. CLEAN & PACKAGE PER FERMI SPEC. #ES-107222

PRIMARY DIMENSIONS ARE IN MM. - MM[IN]

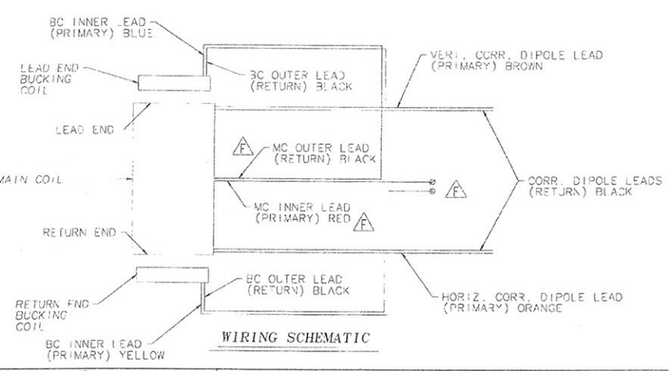

WIRING SCHEMATIC

FEM	PART NO.	DESCRIPTION OR SIZE	QTY.
5	MA-393436	SET SCR #10-28X3/8" STN. STL.	2
4	VD-457117	HE VESSEL LOCK PLATE	1
3	ME 441949	HE VESSEL END PLATE	1
2	ME-457076	HE VESSEL SUB-ASSY (T-2)	1
1	ME-442657	SOLENOID ASSEMBLY (W/CORR. COILS)	1

PARTS LIST

UNLESS OTHERWISE SPECIFIED	CR-DINATOR I. TERECHKINE	01-JUN-2007
X / XX / ANGLES	DRAWN G. DAVIS	27-JUN-2007
± .3 / ± .13 / ±	CHECKED J. BRANDT	28-JUN-2007
	APPROVED J. BRANDT	28-JUN-2007

1. BREAK ALL SHARP EDGES .1X45
2. DO NOT SCALE DRAWING. TOLERANCES BASED UPON ASME Y14.5M-1994
3. MFG. ALL WORK SURFACES 125
5. DRAWING IS METRIC

USED ON: MD-457135

MATERIAL: SEE PARTS LIST

FERMI NATIONAL ACCELERATOR LABORATORY
UNITED STATES DEPARTMENT OF ENERGY

HINS - FRONT END
CH-SECTION FOCUSING SOLENOID
TYPE-2 COLD-MASS ASSEMBLY

SCALE	DRAWING NUMBER	SHEET	REV
1:1	5520.000-ME-442964	1 OF 1	F

CREATED WITH Idea12XSeries GROUP TOUGDICIS-DESIGN-COMPLETED

Created 13:47:25 on 29-01-09 (D-M-Y) By gadavis State 1-INITIAL