REV	DESCRIPTION	DRAWN / APPROVED	DATE
	E.R. #6523		
A	ECO-8826 ROTATED ITEMS-1 & 4 90°	G. DAVIS T. PAGE	04-OCT-2007 10-OCT-2007
B	ECO-8897 RELOCATED LEAD ENC. REVERSED ITEMS 3&4. ADDED FINISHED BORE. ADDED WIRING SCHEME. REVISED ALL NOTES.	G. DAVIS I. TERECHKINE	15-NOV-07 16-NOV-07
C	REV ITEM NO 2 & NOTE NO 2 ECO NO. 9030	S.L. MEREDITH T. PAGE	15-APR-2008 16-APR-2008
D	ECO-9106 NEW NOTE-4, OLD NOTES 4-5&6 - NOW 5-6&7, NEW NOTE-8, OLD NOTE-7 IS NOW NOTE-9.	G. DAVIS I. TERECHKINE	26-JUN-08 26-JUN-08
E	REV. ITEM NO. 2 ECO NO. 9116	S.L. MEREDITH T. PAGE	5-AUG-2008 15-SEP-2008
F	ECO #9291 REVOVED (&) P.S., CHG'D OUTER LEAD TO INNER	G. DAVIS	21-JAN-2009 Nov. 23, 09

SN-1104

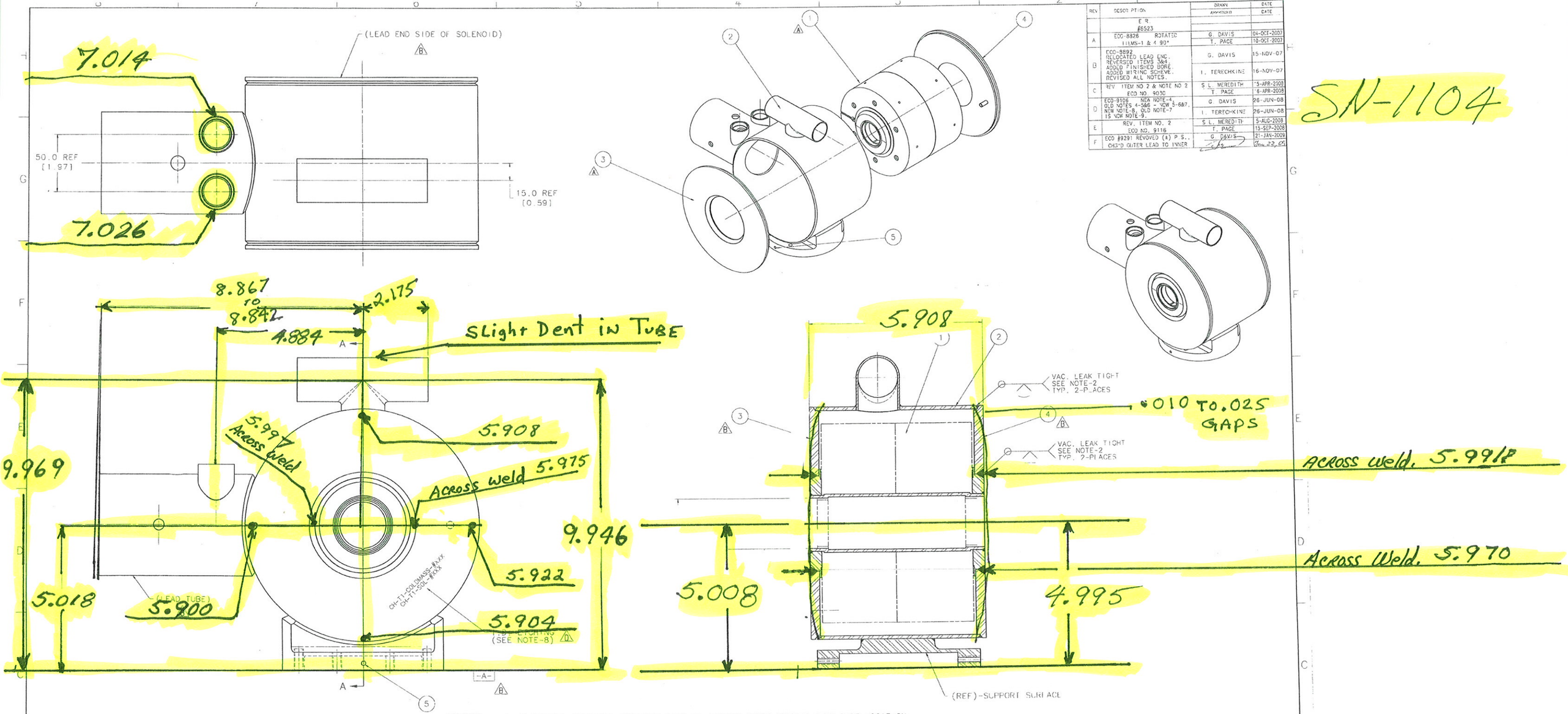

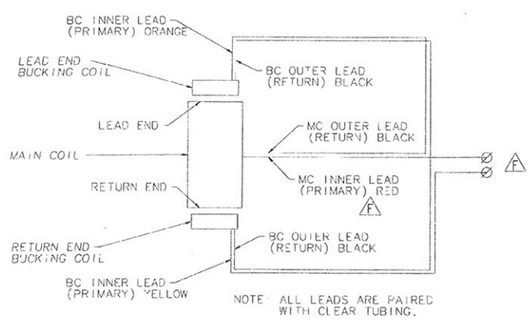

WIRE SCHEMATIC

NOTES:

1. A) INSTALL SOLENOID ASSEMBLY INTO LHe VESSEL WITH PROPER LEAD SIDE LOCATION AS SHOWN.
   B) ADD END PLATES (ITEMS 3&4) WITH THE PIN OF THE LOCKING PLATE ENGAGING THE LEAD END OF THE SOLENOID ASSEMBLY.
   C) MATCH SCRIBE LINES EXIST ON THE PARTS, BUT ALIGNING IS NOT REQUIRED.
   D) ROTATE THE SOLENOID ASSEMBLY INSIDE THE LHe VESSEL SO THAT THE LEADS ARE POINTED TOWARDS THE LEAD TUBE, AND POSITION THE SCRIBES TO BE PARALLEL TO THE MOUNTING BLOCK SURFACE (DATUM-A) AS SHOWN.
2. COMPLETE WELDING NOTING THAT ALL WELDS SHALL BE IN ACCORDANCE WITH THE ASME BOILER & PRESSURE VESSEL CODE (EXCEPT AS SHOWN), SECTION VIII, DIVISION 1. THE VESSEL NEED NOT BE CODE STAMPED, BUT SHALL BE CONSTRUCTED PER THE CODE, MAWP: 42 PSI 20°C.
3. HI-POT ALL COILS TO 1000V. AND RING TEST.
4. He LEAK CHECK WELDED ASSEMBLY PER FERMI SPEC. #ES-107240.
5. IN PREPARATION FOR COLD MASS TESTING - CONNECT THE WINDING OF THE SOLENOID ASSEMBLY WIRES AS SHOWN IN SCHEME AT RIGHT.
6. PERFORM CRYOTEST OF THE COLD MASS IN ACCORDANCE WITH THE TEST REQUIREMENTS.
7. AFTER TESTING THE COLD MASS - FINAL MACHINE THE INNER BORE OF THE LHe TUBE AS SHOWN IN THE CROSS-SECTION VIEW.
8. ETCH I.E. NO'S AT APPROX. LOCATION IN 4mm MIN. HIGH CHARACTERS, AND RECORD NO'S ON REQUIRED PAPERWORK.
9. CLEAN & PACKAGE PER FERMI SPEC. #ES-107222

PRIMARY DIMS ARE IN MM MM[IN].

ITEM	PART NO.	DESCRIPTION OR S.P.C.	QTY.
5	MA-393436	SET SCR. #10-28X3/8" STN. STL.	2
4	MO-457117	LOCK PLATE ASSEMBLY	1
3	ME-441949	HE VESSEL END PLATE	1
2	ME-441940	HE VESSEL SUB-ASSEMBLY	1
-	ME-442761	SOLENOID ASSEMBLY	1

PARTS LIST

UNLESS OTHERWISE SPECIFIED					
X	XX	ANGLES	ORIGINATOR	I. TERCHKINE	
± .5	± .13	±	DRAWN	G. DAVIS	27-JUN-2007
			CHECKED	J. BRANDT	28-JUN-2007
			APPROVED	J. BRANDT	28-JUN-2007

1. BREAK ALL SHARP EDGES .005
2. DO NOT SCALE DRAWING.
3. DIMENSIONS BASED UPON ASME Y14.5M-1994
4. MAX. ALL BACK SURFACES 125/
5. DRAWING UNITS METRIC

USED ON: MO-457124

MATERIAL: SEE PARTS LIST

FERMI NATIONAL ACCELERATOR LABORATORY
UNITED STATES DEPARTMENT OF ENERGY

HINS - FRONT END
CH-SECTION FOCUSING SOLENOID
TYPE-1 COLD-MASS ASSEMBLY

SCALE	DRAWING NUMBER	SHEET	REV
1:1	5520.000-ME-442963	1 OF 1	F

CREATED WITH: Pro/ENGINEER Wildfire 3.0 GROUP: TD/DOE15-DESIGN-COMPUTING

Created 07:57:32 on 29-01-09 (D-M-Y) By: yadavis State: 1-INITIAL