SN 1207

#1 .3121

#2 .3132

#3 .3126

#4 .3124

#5 .3148

#6 .3132

#7 .3131

#8 .3145

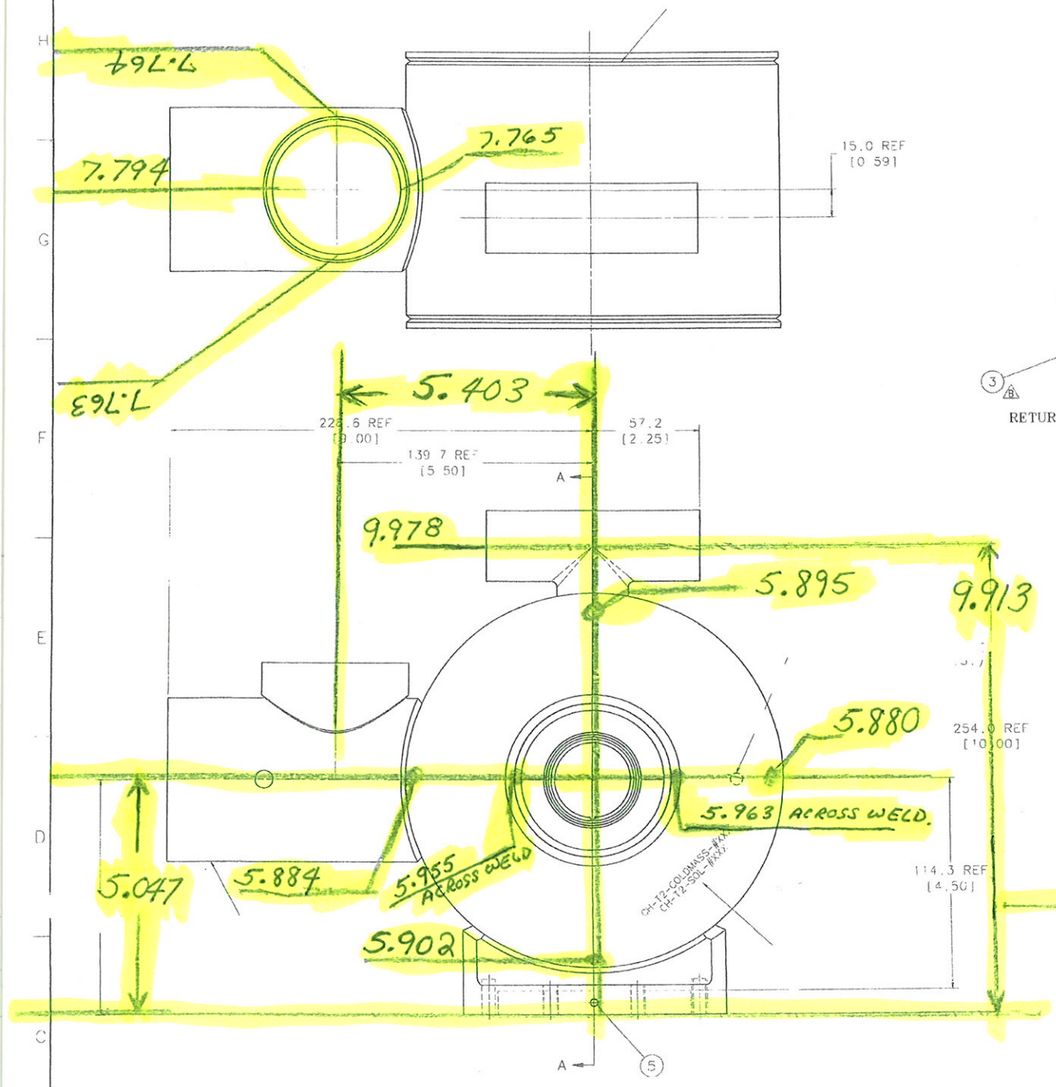

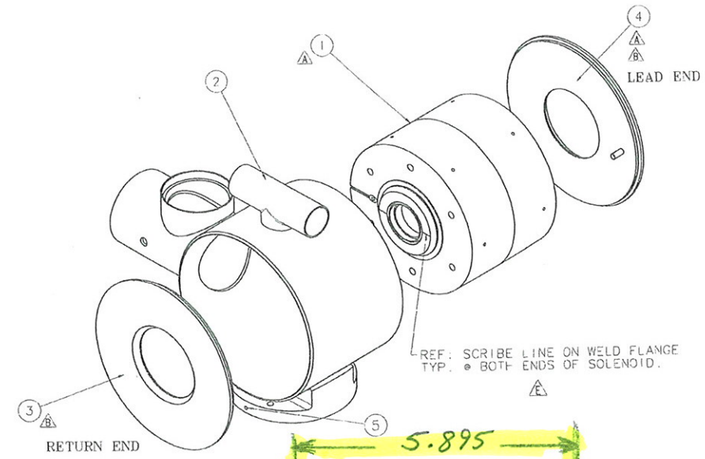

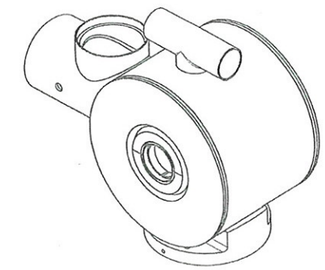

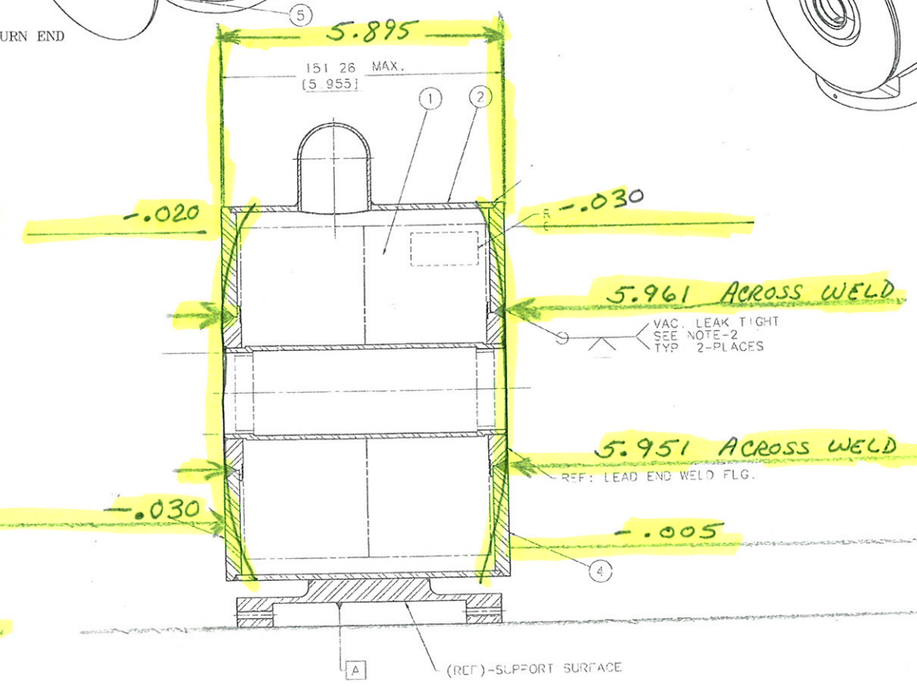

REV	DESCRIPTION	DRAWN / APPROVED	DATE
	E.R. #8523		
A	ECO-8826 ROTATED ITEMS-1 & 2 90°	G. DAVIS / T. PAGE	04-OCT-2007 / 16-OCT-2007
B	ECO-8872 RELOCATED LEAD END REVERSED ITEMS 3&4 ADDED FINISHED BORE ADDED WIRING SCHEME REVISED ALL NOTES	G. DAVIS / I. TERECHKINE	07-NOV-07 / 08-NOV-07
C	REV ITEMS NO. 7 ECO NO. 9032	S.L. VEREDITT / T. PAGE	11-APR-2008 / 15-APR-2008
D	ECO-9109 NEW NOTE-4, OLD NOTES 4-6 - NOW NOTES 5-7 NEW NOTE-8, OLD NOTE-7 IS NOW NOTE-9	G. DAVIS / I. TERECHKINE	26-JUN-08 / 26-JUN-08
E	ECO-9274 REV. NOTE-1, ADDED REFERENCE NOTES	G. DAVIS / I. TERECHKINE	07-OCT-2008 / 09-OCT-2008
F	ECO-9291 REV. NOTE 1C, REMOVED (4) F.S. CHANGED M.C. OUTER (RED) TO INNER.	G. DAVIS	21-JAN-2009 / Nov 22, 09

PRIMARY DIMENSIONS ARE IN MM. - MM[IN]

NOTES:

(B)(D)(E)

1. A) INSTALL SOLENOID ASSEMBLY INTO LHe VESSEL WITH PROPER LEAD SIDE LOCATION AS SHOWN
   B) ADD BOTH END PLATES (ITEMS 3&4) WITH THE PIN OF THE LOCKING PLATE ENGAGING THE PIN HOLE ON THE LEAD END OF THE SOLENOID ASSEMBLY
   (E) C) ROTATE THE SOLENOID ASSEMBLY SO THAT SCRIBE LINE ON THE LEAD END WELD FLANGE IS PARALLEL TO THE SUPPORT POST MOUNTING BLOCK SURFACE (DATUM-A) WITHIN 1/2° (THIS WILL ESTABLISH THE VERTICAL PLANE OF THE DIPOLE CORRECTOR.) TACK WELD BOTH END PLATE FLANGES IN PLACE
2. ALL WELDS SHALL BE IN ACCORDANCE WITH THE ASME BOILER & PRESSURE VESSEL CODE (EXCEPT AS SHOWN), SECTION VIII, DIVISION 1. THE VESSEL NEED NOT BE CODE STAMPED BUT SHALL BE CONSTRUCTED PER THE CODE, MAWP 42 PSI 20°C
3. HI-POT ALL COILS TO 1000V AND RING TEST
4. He LEAK CHECK WELDED ASSEMBLY PER FERMI SPEC. #ES-107240.
5. IN PREPARATION FOR COLD MASS TESTING - CONNECT THE WINDING OF THE SOLENOID ASSEMBLY AS SHOWN IN THE WIRING SCHEME AT LEFT
6. PERFORM CRYTEST OF THE COLD-MASS IN ACCORDANCE WITH THE TEST REQUIREMENTS.
7. AFTER TESTING THE COLD-MASS - FINAL MACHINE THE INNER BORE OF THE LHe TUBE AS SHOWN IN THE CROSS-SECTION VIEW
8. ETCH I.D. NO'S AT APPROX. LOCATION SHOWN IN 4mm MIN. HIGH CHARACTERS, AND RECORD NO'S ON REQUIRED PAPERWORK.
9. CLEAN & PACKAGE PER FERMI SPEC. #ES-107222

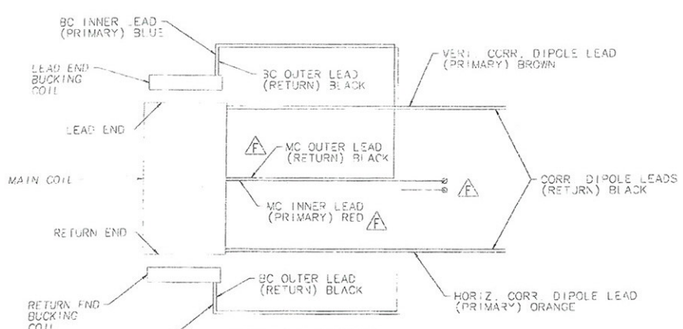

WIRING SCHEMATIC

5	MA-393436	SET SCR #10-28X3/8" STN. STL	2
4	MD-457117	HE VESSEL LOCK PLATE	1
3	ME-441949	HE VESSEL END PLATE	1
2	ME-457076	HE VESSEL SUB-ASSY (T-2)	1
1	ME-442657	SOLENOID ASSEMBLY (W/CORR. COILS)	1
FEM	PART NO	DESCRIPTION OR SIZE	QTY

PARTS LIST

UNLESS OTHERWISE SPECIFIED	CO-ORDINATOR	I. TERECHKINE	01-JUN-2007
X / XX / ANGLES	DRAWN	G. DAVIS	27-JUN-2007
± .5 / ± .13 / ±	CHECKED	J. BRANDT	28-JUN-2007
1. BREAK ALL SHARP EDGES .01 MAX.	APPROVED	J. BRANDT	28-JUN-2007
2. DO NOT SCALE DRAWING. TOLERANCES BASED UPON ASME Y14.5M-1994	USED ON	MD-457135	
4. MAX. 125 MICRO SURFACES	MATERIAL	SEE PARTS LIST	
5. DRAWING IN IS METRIC			

FERMI NATIONAL ACCELERATOR LABORATORY
UNITED STATES DEPARTMENT OF ENERGY

HINS - FRONT END
CH-SECTION FOCUSING SOLENOID
TYPE-2 COLD-MASS ASSEMBLY

SCALE	DRAWING NUMBER	SHEET	REV
1:1	5520.000-ME-442964	1 OF 1	F

CREATED WITH 10ug12NXSeries GROUP TD/DOCIS-DESIGN-COMPUTING

Created 13:12:25 on 29-01-09 (D-M-Y) by gadav State INITIAL