FERMILAB Technical Division

QUALITY CONTROL REPORT

DATE=9/22/2009 TIME=9:40:37 AM

PART NAME : PN440004-n-Trans-Rings-000-TB9ACC011-v1-IR

REV NUMBER :

SER NUMBER :

STATS COUNT : 1

440004-n
FNAL 1.3GHZ TESLA
RF CAVITY
ASSEMBLY
measurement of Transition Rings
@ 000 rotational orientation

'Inspected by ' : Robert Riley
'Cavity Number' : TB9ACC011
' ' : 0909211142

Datum Discs

MM	DIM LOC1= LOCATION OF CIRCLE CIRC_DATUM_DISC_MC					
AX	NOMINAL	MEAS	DEV	+TOL	-TOL	OUTTOL
X	0.000	0.000	0.000	0.000	0.000	0.000
Y	25.000	26.184	1.184	10.000	10.000	0.000
Z	0.000	0.000	0.000	0.000	0.000	0.000
D	111.000	110.952	-0.048	0.050	0.050	0.000
RN	0.000	0.019	0.019	0.050	0.000	0.000

MM	DIM LOC2= LOCATION OF CIRCLE CIRC_DATUM_DISC_FP					
AX	NOMINAL	MEAS	DEV	+TOL	-TOL	OUTTOL
X	0.000	0.000	0.000	0.000	0.000	0.000
Y	-1032.384	-1027.331	5.054	10.000	10.000	0.000
Z	0.000	0.000	0.000	0.000	0.000	0.000
D	111.000	110.878	-0.122	0.050	0.050	0.072
RN	0.000	0.032	0.032	0.050	0.000	0.000

Datum Disc planes

MM	DIM LOC3= LOCATION OF PLANE PLNC_DD_MC					
AX	NOMINAL	MEAS	DEV	+TOL	-TOL	OUTTOL
Y	27.000	28.481	1.481	10.000	10.000	0.000
FL	0.000	0.024	0.024	0.100	0.000	0.000

MM	DIM LOC4= LOCATION OF PLANE PLNC_DD_FP					
AX	NOMINAL	MEAS	DEV	+TOL	-TOL	OUTTOL
Y	-1034.384	-1029.713	4.672	10.000	10.000	0.000
FL	0.000	0.066	0.066	0.100	0.000	0.000

Distance between Datum Disc planes

PART NUMBER=PN440004-n-Trans-Rings-000-TB9ACC011-v1-IR DATE=9/22/2009 TIME=9:40:37 AM

MM	DIM DIST1= 2D DISTANCE FROM PLANE PLNC_DD_FP TO PLANE PLNC_DD_MC PAR TO YAXIS

AX	NOMINAL	MEAS	DEV	+TOL	-TOL	OUTTOL
M	1061.060	1058.194	-2.866	0.200	0.200	2.666

PART NUMBER=PN440004-n-Trans-Rings-000-TB9ACC011-v1-IR DATE=9/22/2009 TIME=9:40:37 AM
Minimum Circumscribed 36 point constructed circle
Transition Ring Main Coupler end
235.0 O.D.

MM	DIM LOC5= LOCATION OF CIRCLE CIRC_TR_MC_OD					
AX	NOMINAL	MEAS	DEV	+TOL	-TOL	OUTTOL
X	0.000	0.149	0.149	0.250	0.250	0.000
Z	0.000	-0.113	-0.113	0.250	0.250	0.000
D	235.000	234.114	-0.886	0.250	0.250	0.636
RN	0.000	0.102	0.102	0.250	0.000	0.000

MM	DIM RND1= ROUNDNESS OF CIRCLE CIRC_TR_MC_OD					
AX	NOMINAL	MEAS	DEV	+TOL	-TOL	OUTTOL
M	0.000	0.102	0.102	0.250	0.000	0.000

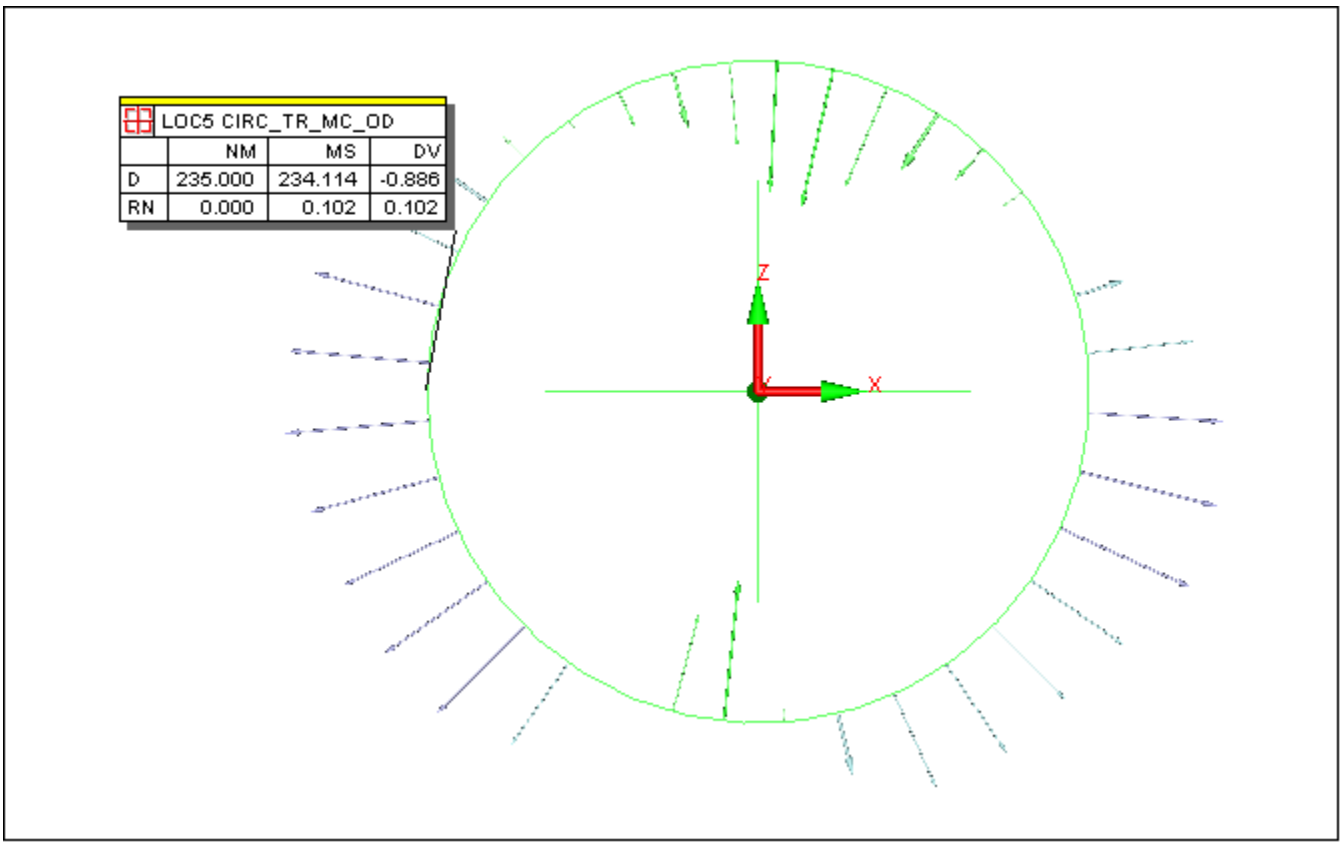

Minimum Circumscribed 36 point constructed circle
Transition Ring Main Coupler end
235.0 O.D. x1000

PART NUMBER=PN440004-n-Trans-Rings-000-TB9ACC011-v1-IR DATE=9/22/2009 TIME=9:40:37 AM
Minimum Circumscribed 36 point constructed circle
Transition Ring Main Coupler end
233.00 O.D. step

MM	DIM LOC6= LOCATION OF CIRCLE CIRC_TR_MC_OD_STEP					
AX	NOMINAL	MEAS	DEV	+TOL	-TOL	OUTTOL
X	0.000	0.162	0.162	0.250	0.250	0.000
Z	0.000	-0.165	-0.165	0.250	0.250	0.000
D	230.000	229.244	-0.755	0.000	0.250	0.505
RN	0.000	0.103	0.103	0.250	0.000	0.000

MM	DIM RND2= ROUNDNESS OF CIRCLE CIRC_TR_MC_OD_STEP					
AX	NOMINAL	MEAS	DEV	+TOL	-TOL	OUTTOL
M	0.000	0.103	0.103	0.250	0.000	0.000

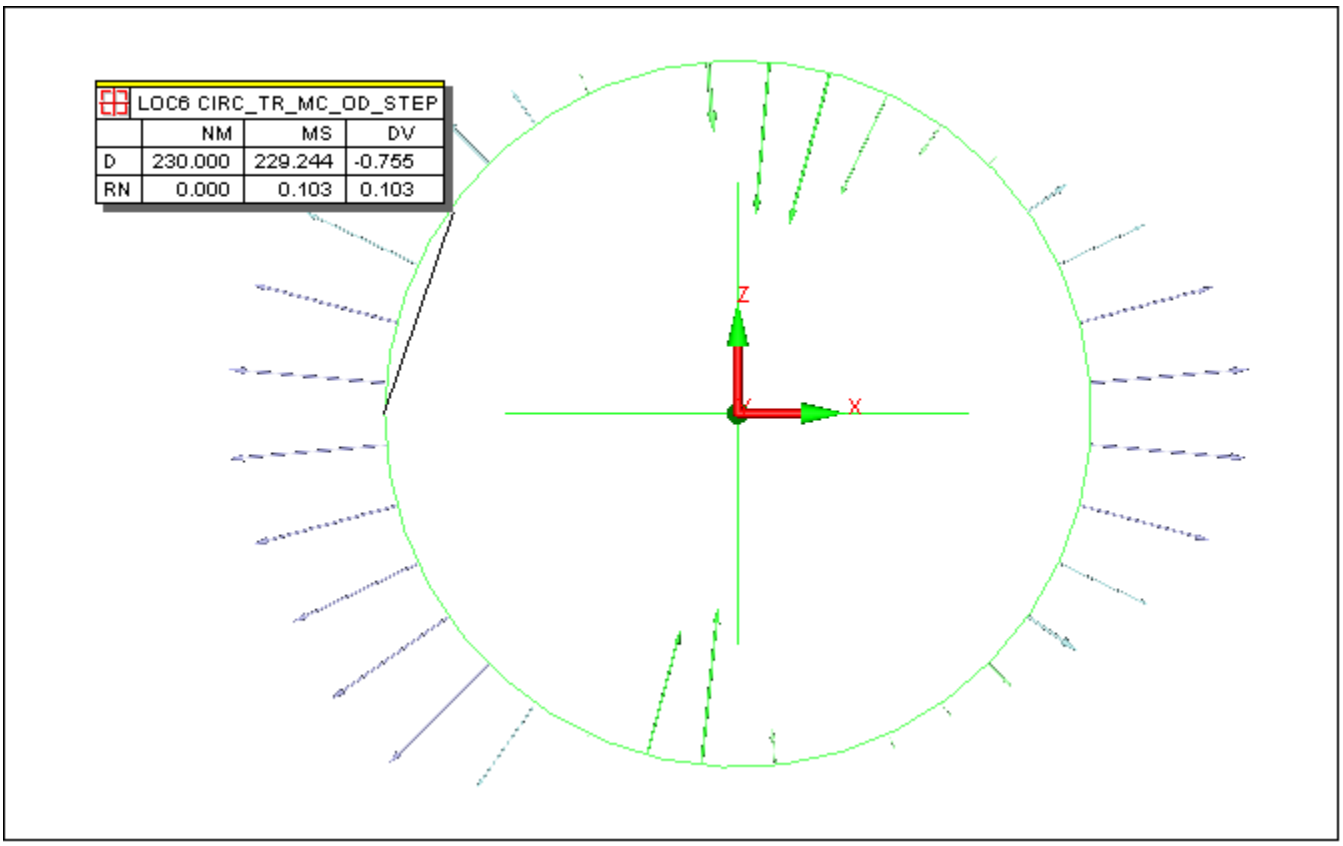

Minimum Circumscribed 36 point constructed circle
Transition Ring Main Coupler end
233.00 O.D. step x1000

PART NUMBER=PN440004-n-Trans-Rings-000-TB9ACC011-v1-IR DATE=9/22/2009 TIME=9:40:37 AM
Minimum Circumscribed 36 point constructed circle
Transition Ring Field Probe end
211.0 O.D.

MM	DIM LOC7= LOCATION OF CIRCLE CIRC_TR_FP_OD					
AX	NOMINAL	MEAS	DEV	+TOL	-TOL	OUTTOL
X	0.000	0.014	0.014	0.250	0.250	0.000
Z	0.000	-0.215	-0.215	0.250	0.250	0.000
D	211.000	209.900	-1.101	0.250	0.250	0.851
RN	0.000	0.075	0.075	0.250	0.000	0.000

MM	DIM RND3= ROUNDNESS OF CIRCLE CIRC_TR_FP_OD					
AX	NOMINAL	MEAS	DEV	+TOL	-TOL	OUTTOL
M	0.000	0.075	0.075	0.250	0.000	0.000

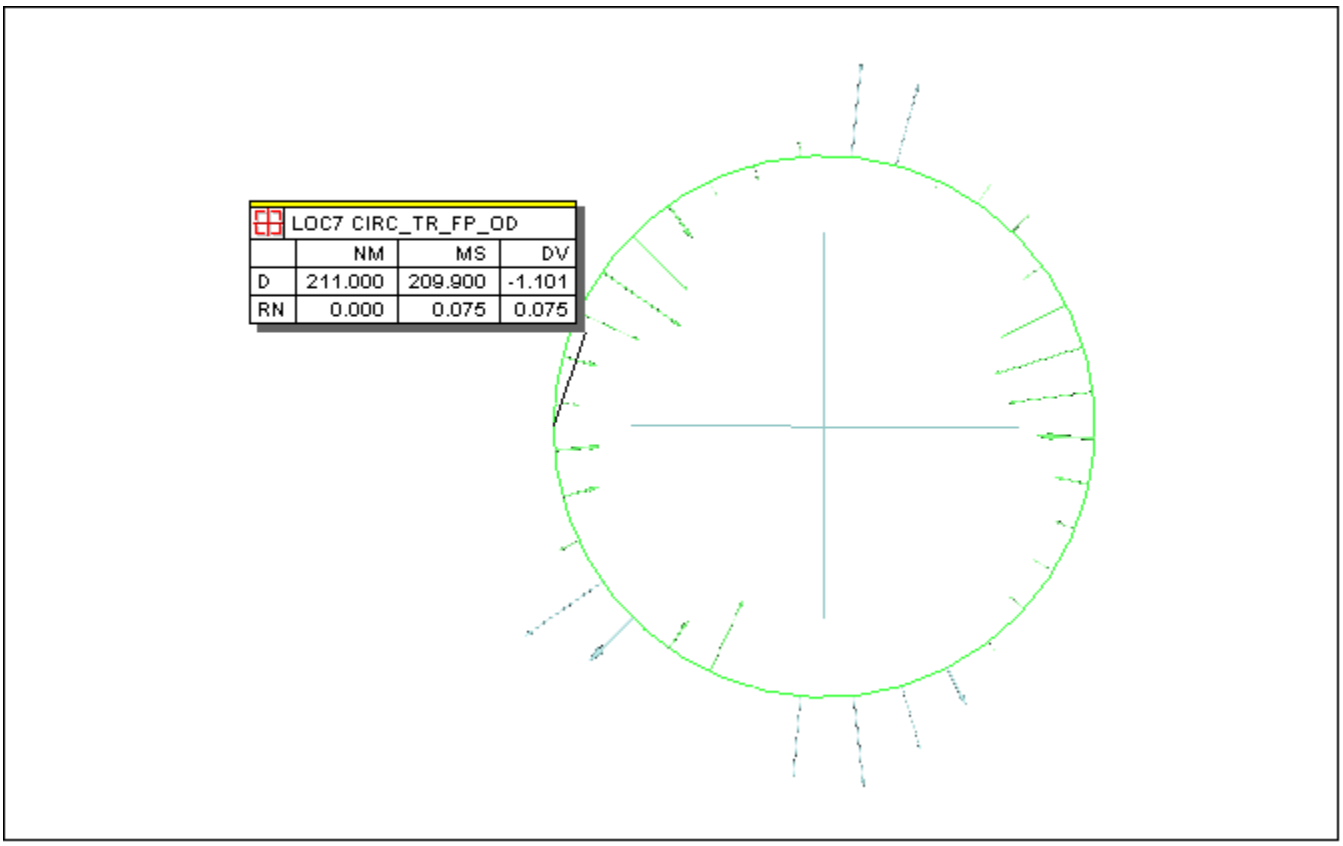

Minimum Circumscribed 36 point constructed circle
Transition Ring Field Probe end
211.0 O.D. x1000

PART NUMBER=PN440004-n-Trans-Rings-000-TB9ACC011-v1-IR DATE=9/22/2009 TIME=9:40:37 AM
Minimum Circumscribed 36 point constructed circle
Transition Ring Field Probe end
215.0 O.D. lip

MM	DIM LOC8= LOCATION OF CIRCLE CIRC_TR_FP_OD_LIP					
AX	NOMINAL	MEAS	DEV	+TOL	-TOL	OUTTOL
X	0.000	0.013	0.013	0.250	0.250	0.000
Z	0.000	-0.263	-0.263	0.250	0.250	0.013
D	215.000	213.928	-1.072	0.250	0.250	0.822
RN	0.000	0.088	0.088	0.250	0.000	0.000

MM	DIM RND4= ROUNDNESS OF CIRCLE CIRC_TR_FP_OD_LIP					
AX	NOMINAL	MEAS	DEV	+TOL	-TOL	OUTTOL
M	0.000	0.088	0.088	0.250	0.000	0.000

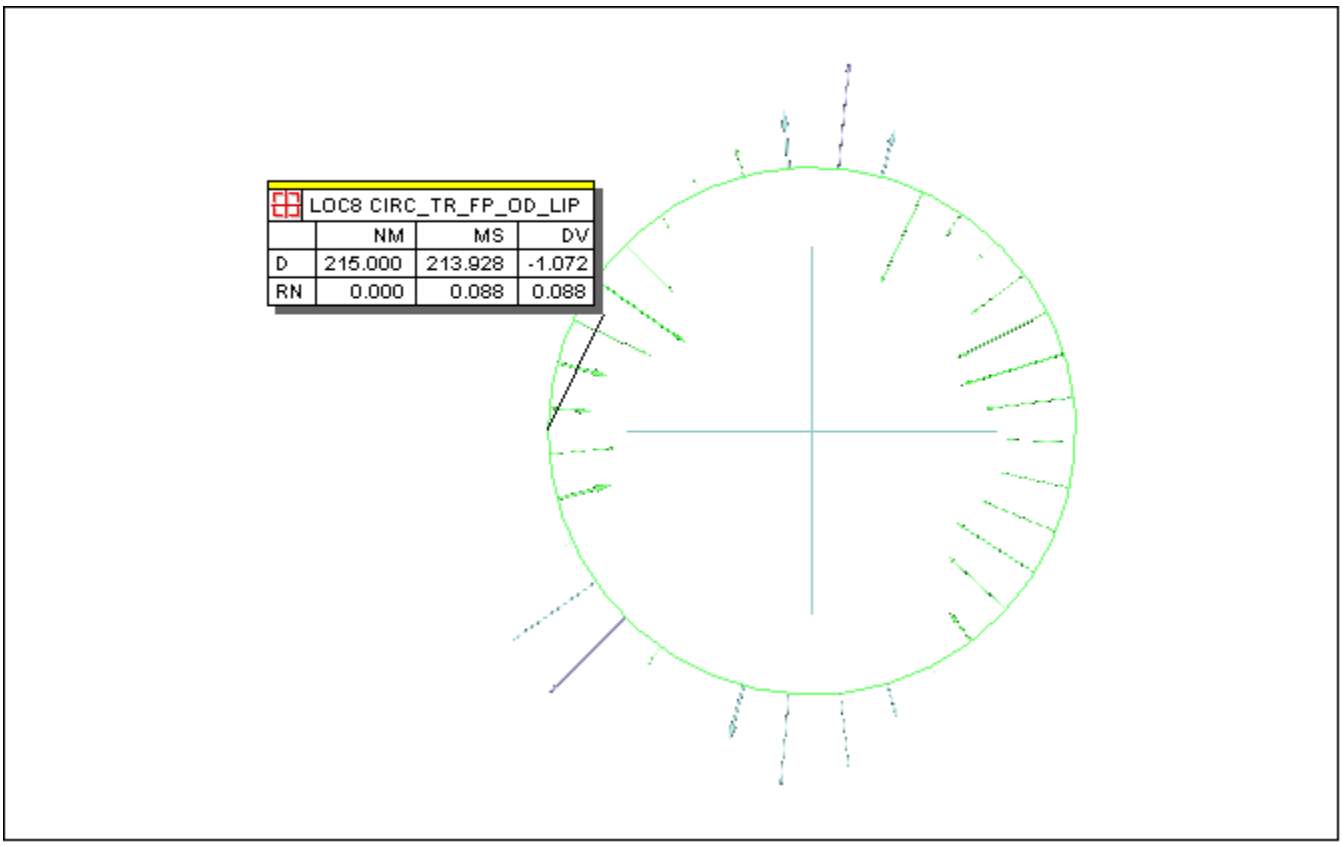

Minimum Circumscribed 36 point constructed circle
Transition Ring Field Probe end
215.0 O.D. lip x1000

PART NUMBER=PN440004-n-Trans-Rings-000-TB9ACC011-v1-IR DATE=9/22/2009 TIME=9:40:38 AM

Transition Ring planes

MM	DIM LOC9= LOCATION OF PLANE PLNC_TR_MC					
AX	NOMINAL	MEAS	DEV	+TOL	-TOL	OUTTOL
Y	0.000	0.000	0.000	0.000	0.000	0.000
FL	0.000	0.239	0.239	0.200	0.000	0.039

MM	DIM LOC10= LOCATION OF PLANE PLNC_TR_FP					
AX	NOMINAL	MEAS	DEV	+TOL	-TOL	OUTTOL
Y	-1007.500	-1003.254	4.246	10.000	10.000	0.000
FL	0.000	0.359	0.359	0.200	0.000	0.159

MM	DIM FLAT3= FLATNESS OF PLANE PLNC_TR_MC					
AX	NOMINAL	MEAS	DEV	+TOL	-TOL	OUTTOL
M	0.000	0.239	0.239	0.250	0.000	0.000

MM	DIM FLAT4= FLATNESS OF PLANE PLNC_TR_FP					
AX	NOMINAL	MEAS	DEV	+TOL	-TOL	OUTTOL
M	0.000	0.359	0.359	0.250	0.000	0.109

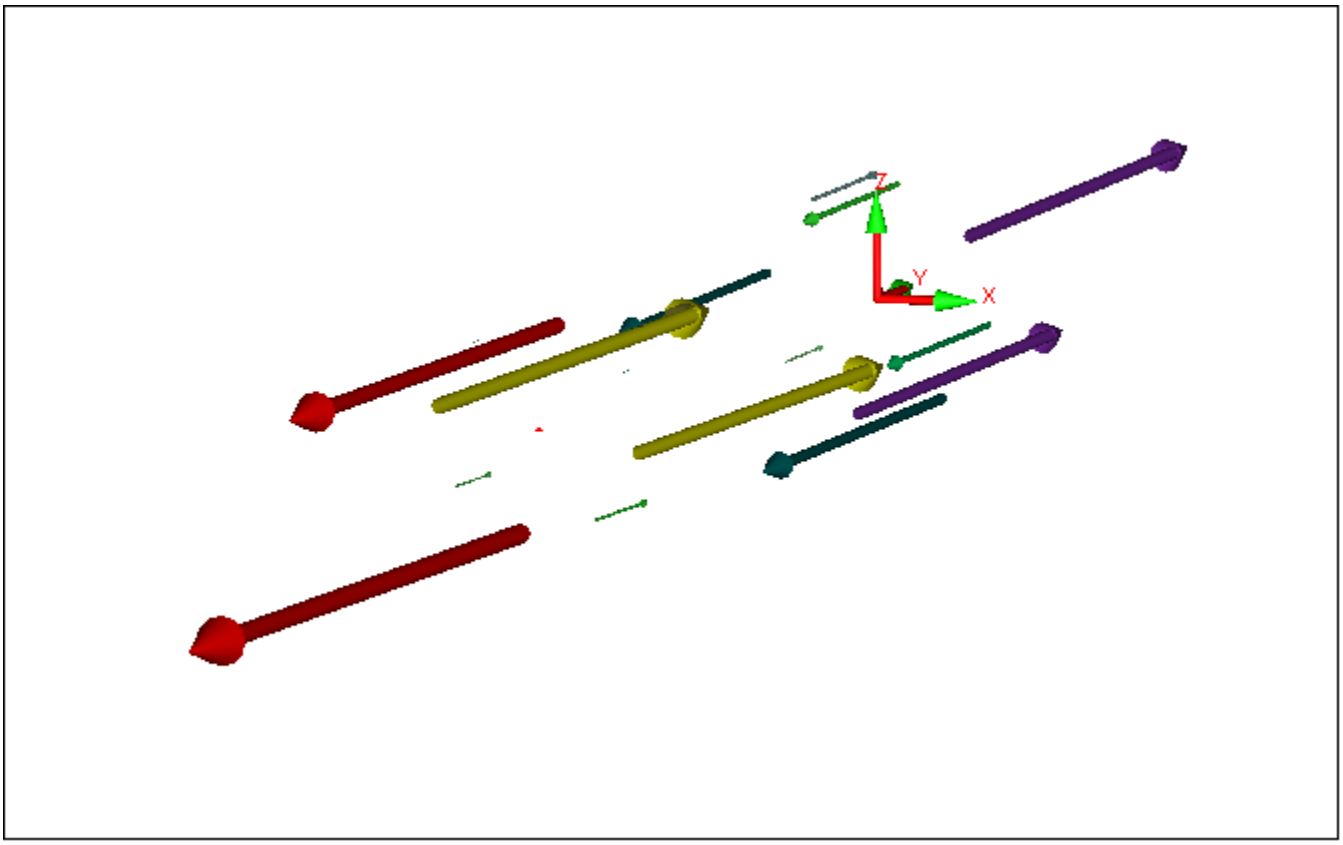

Flatness of Transition Rings
x5000

PART NUMBER=PN440004-n-Trans-Rings-000-TB9ACC011-v1-IR DATE=9/22/2009 TIME=9:40:38 AM
""

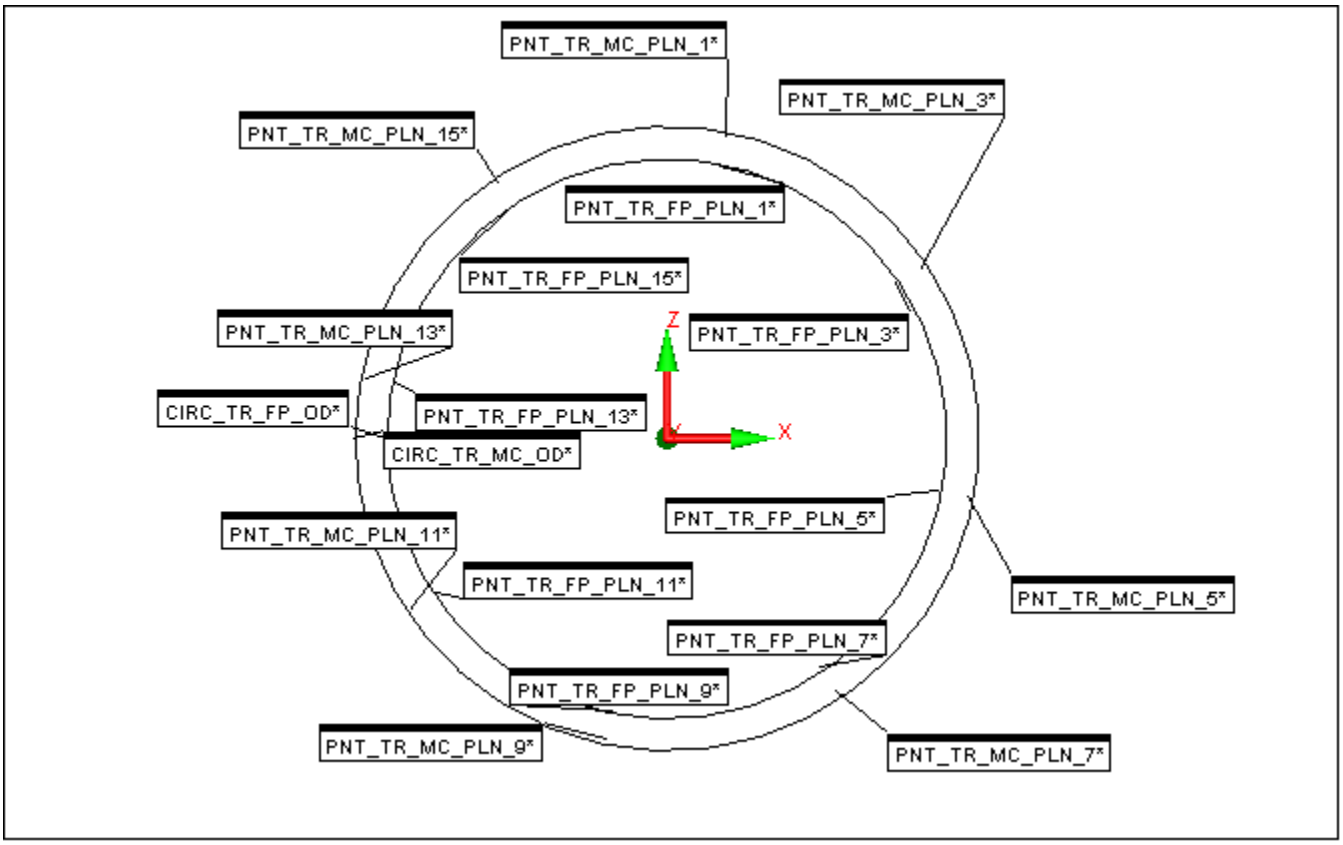

Transition Ring points Main Coupler end

MM	DIM LOC11= LOCATION OF POINT PNT_TR_MC_PLN_1					
AX	NOMINAL	MEAS	DEV	+TOL	-TOL	OUTTOL
Y	0.000	-0.708	-0.709	1.000	1.000	0.000
PR	115.000	114.956	-0.044	1.000	1.000	0.000
PA	101.250	101.246	-0.004	1.000	1.000	0.000

MM	DIM LOC12= LOCATION OF POINT PNT_TR_MC_PLN_3					
AX	NOMINAL	MEAS	DEV	+TOL	-TOL	OUTTOL
Y	0.000	0.150	0.150	1.000	1.000	0.000
PR	115.000	114.974	-0.026	1.000	1.000	0.000
PA	146.250	146.263	0.013	1.000	1.000	0.000

MM	DIM LOC13= LOCATION OF POINT PNT_TR_MC_PLN_5					
AX	NOMINAL	MEAS	DEV	+TOL	-TOL	OUTTOL
Y	0.000	0.616	0.617	1.000	1.000	0.000
PR	115.000	115.004	0.004	1.000	1.000	0.000
PA	-168.750	-168.734	0.016	1.000	1.000	0.000

MM	DIM LOC14= LOCATION OF POINT PNT_TR_MC_PLN_7					
AX	NOMINAL	MEAS	DEV	+TOL	-TOL	OUTTOL
Y	0.000	0.832	0.832	1.000	1.000	0.000
PR	115.000	115.029	0.029	1.000	1.000	0.000
PA	-123.750	-123.737	0.013	1.000	1.000	0.000

PART NUMBER=PN440004-n-Trans-Rings-000-TB9ACC011-v1-IR DATE=9/22/2009 TIME=9:40:38 AM

MM	DIM LOC15= LOCATION OF POINT PNT_TR_MC_PLN_9					
AX	NOMINAL	MEAS	DEV	+TOL	-TOL	OUTTOL
Y	0.000	0.775	0.776	1.000	1.000	0.000
PR	115.000	115.042	0.042	1.000	1.000	0.000
PA	-78.750	-78.757	-0.007	1.000	1.000	0.000

MM	DIM LOC16= LOCATION OF POINT PNT_TR_MC_PLN_11					
AX	NOMINAL	MEAS	DEV	+TOL	-TOL	OUTTOL
Y	0.000	0.005	0.005	1.000	1.000	0.000
PR	115.000	115.024	0.024	1.000	1.000	0.000
PA	-33.750	-33.766	-0.016	1.000	1.000	0.000

MM	DIM LOC17= LOCATION OF POINT PNT_TR_MC_PLN_13					
AX	NOMINAL	MEAS	DEV	+TOL	-TOL	OUTTOL
Y	0.000	-0.767	-0.767	1.000	1.000	0.000
PR	115.000	115.003	0.003	1.000	1.000	0.000
PA	11.250	11.224	-0.026	1.000	1.000	0.000

MM	DIM LOC18= LOCATION OF POINT PNT_TR_MC_PLN_15					
AX	NOMINAL	MEAS	DEV	+TOL	-TOL	OUTTOL
Y	0.000	-0.900	-0.900	1.000	1.000	0.000
PR	115.000	114.971	-0.029	1.000	1.000	0.000
PA	56.250	56.230	-0.020	1.000	1.000	0.000

Transition Ring points Field Probe end

MM	DIM LOC19= LOCATION OF POINT PNT_TR_FP_PLN_1					
AX	NOMINAL	MEAS	DEV	+TOL	-TOL	OUTTOL
Y	-1007.500	-1002.459	5.041	1.000	1.000	4.041
PR	104.000	103.954	-0.046	1.000	1.000	0.000
PA	101.250	101.249	-0.001	1.000	1.000	0.000

MM	DIM LOC20= LOCATION OF POINT PNT_TR_FP_PLN_3					
AX	NOMINAL	MEAS	DEV	+TOL	-TOL	OUTTOL
Y	-1007.500	-1002.625	4.875	1.000	1.000	3.875
PR	104.000	103.982	-0.018	1.000	1.000	0.000
PA	146.250	146.265	0.015	1.000	1.000	0.000

MM	DIM LOC21= LOCATION OF POINT PNT_TR_FP_PLN_5					
AX	NOMINAL	MEAS	DEV	+TOL	-TOL	OUTTOL
Y	-1007.500	-1003.182	4.318	1.000	1.000	3.318
PR	104.000	104.014	0.014	1.000	1.000	0.000
PA	-168.750	-168.732	0.018	1.000	1.000	0.000

MM	DIM LOC22= LOCATION OF POINT PNT_TR_FP_PLN_7					
AX	NOMINAL	MEAS	DEV	+TOL	-TOL	OUTTOL
Y	-1007.500	-1003.950	3.550	1.000	1.000	2.550
PR	104.000	104.047	0.047	1.000	1.000	0.000
PA	-123.750	-123.734	0.016	1.000	1.000	0.000

PART NUMBER=PN440004-n-Trans-Rings-000-TB9ACC011-v1-IR DATE=9/22/2009 TIME=9:40:38 AM

MM DIM LOC23= LOCATION OF POINT PNT_TR_FP_PLN_9

AX	NOMINAL	MEAS	DEV	+TOL	-TOL	OUTTOL
Y	-1007.500	-1004.407	3.093	1.000	1.000	2.093
PR	104.000	104.219	0.219	1.000	1.000	0.000
PA	-78.750	-78.748	0.002	1.000	1.000	0.000

MM DIM LOC24= LOCATION OF POINT PNT_TR_FP_PLN_11

AX	NOMINAL	MEAS	DEV	+TOL	-TOL	OUTTOL
Y	-1007.500	-1003.855	3.645	1.000	1.000	2.645
PR	104.000	104.165	0.165	1.000	1.000	0.000
PA	-33.750	-33.825	-0.075	1.000	1.000	0.000

MM DIM LOC25= LOCATION OF POINT PNT_TR_FP_PLN_13

AX	NOMINAL	MEAS	DEV	+TOL	-TOL	OUTTOL
Y	-1007.500	-1003.020	4.480	1.000	1.000	3.480
PR	104.000	104.019	0.019	1.000	1.000	0.000
PA	11.250	11.123	-0.127	1.000	1.000	0.000

MM DIM LOC26= LOCATION OF POINT PNT_TR_FP_PLN_15

AX	NOMINAL	MEAS	DEV	+TOL	-TOL	OUTTOL
Y	-1007.500	-1002.536	4.964	1.000	1.000	3.964
PR	104.000	103.836	-0.164	1.000	1.000	0.000
PA	56.250	56.152	-0.098	1.000	1.000	0.000

Distances between matching points on Transition Rings

MM DIM DIST_PA_11.25= 2D DISTANCE FROM POINT PNT_TR_MC_PLN_13 TO POINT PNT_TR_FP_PLN_13 PAR TO YAXIS

AX	NOMINAL	MEAS	DEV	+TOL	-TOL	OUTTOL
M	1007.500	1002.253	-5.247	1.000	1.000	4.247

MM DIM DIST_PA_56.25= 2D DISTANCE FROM POINT PNT_TR_MC_PLN_15 TO POINT PNT_TR_FP_PLN_15 PAR TO YAXIS

AX	NOMINAL	MEAS	DEV	+TOL	-TOL	OUTTOL
M	1007.500	1001.636	-5.864	1.000	1.000	4.864

MM DIM DIST_PA_101.25= 2D DISTANCE FROM POINT PNT_TR_MC_PLN_1 TO POINT PNT_TR_FP_PLN_1 PAR TO YAXIS

AX	NOMINAL	MEAS	DEV	+TOL	-TOL	OUTTOL
M	1007.500	1001.751	-5.749	1.000	1.000	4.749

MM DIM DIST_PA_146.25= 2D DISTANCE FROM POINT PNT_TR_MC_PLN_3 TO POINT PNT_TR_FP_PLN_3 PAR TO YAXIS

AX	NOMINAL	MEAS	DEV	+TOL	-TOL	OUTTOL
M	1007.500	1002.775	-4.725	1.000	1.000	3.725

MM DIM DIST_PA_-168.75= 2D DISTANCE FROM POINT PNT_TR_MC_PLN_5 TO POINT PNT_TR_FP_PLN_5 PAR TO YAXIS

AX	NOMINAL	MEAS	DEV	+TOL	-TOL	OUTTOL
M	1007.500	1003.798	-3.702	1.000	1.000	2.702

MM DIM DIST_PA_-123.75= 2D DISTANCE FROM POINT PNT_TR_MC_PLN_7 TO POINT PNT_TR_FP_PLN_7 PAR TO YAXIS

AX	NOMINAL	MEAS	DEV	+TOL	-TOL	OUTTOL
M	1007.500	1004.782	-2.718	1.000	1.000	1.718

MM DIM DIST_PA_-78.75= 2D DISTANCE FROM POINT PNT_TR_MC_PLN_9 TO POINT PNT_TR_FP_PLN_9 PAR TO YAXIS

AX	NOMINAL	MEAS	DEV	+TOL	-TOL	OUTTOL
M	1007.500	1005.182	-2.318	1.000	1.000	1.318

MM DIM DIST_PA_-33.75= 2D DISTANCE FROM POINT PNT_TR_MC_PLN_11 TO POINT PNT_TR_FP_PLN_11 PAR TO YAXIS

AX	NOMINAL	MEAS	DEV	+TOL	-TOL	OUTTOL
M	1007.500	1003.860	-3.640	1.000	1.000	2.640

MM DIM DIST_BETWEEN_PLANES= 2D DISTANCE FROM PLANE PLNC_TR_MC TO PLANE PLNC_TR_FP PAR TO YAXIS

AX	NOMINAL	MEAS	DEV	+TOL	-TOL	OUTTOL
M	1007.500	1003.254	-4.246	1.000	1.000	3.246

LOCATIONS OF CONSTRUCTED CIRCLES
ON 18 HALF CELLS

MM DIM LOC_CC3= LOCATION OF CIRCLE CIRC_CAV_1_1

AX	NOMINAL	MEAS	DEV	+TOL	-TOL	OUTTOL
X	0.000	0.047	0.047	0.200	0.200	0.000
Y	0.000	-966.717	-966.717	2000.000	2000.000	0.000
Z	0.000	-0.300	-0.300	0.200	0.200	0.100
D	210.300	210.669	0.369	0.200	0.200	0.169
RN	0.000	0.149	0.149	0.200	0.000	0.000

MM DIM LOC_CC4= LOCATION OF CIRCLE CIRC_CAV_1_2

AX	NOMINAL	MEAS	DEV	+TOL	-TOL	OUTTOL
X	0.000	0.064	0.064	0.200	0.200	0.000
Y	0.000	-954.167	-954.167	2000.000	2000.000	0.000
Z	0.000	-0.351	-0.351	0.200	0.200	0.151
D	210.300	210.441	0.141	0.200	0.200	0.000
RN	0.000	0.127	0.127	0.200	0.000	0.000

MM DIM LOC_CC5= LOCATION OF CIRCLE CIRC_CAV_2_1

AX	NOMINAL	MEAS	DEV	+TOL	-TOL	OUTTOL
X	0.000	0.224	0.224	0.200	0.200	0.024
Y	0.000	-852.367	-852.367	2000.000	2000.000	0.000
Z	0.000	-0.946	-0.946	0.200	0.200	0.746
D	210.300	210.674	0.374	0.200	0.200	0.174
RN	0.000	0.105	0.105	0.200	0.000	0.000

PART NUMBER=PN440004-n-Trans-Rings-000-TB9ACC011-v1-IR DATE=9/22/2009 TIME=9:40:38 AM

MM DIM LOC_CC6= LOCATION OF CIRCLE CIRC_CAV_2_2

AX	NOMINAL	MEAS	DEV	+TOL	-TOL	OUTTOL
X	0.000	0.193	0.193	0.200	0.200	0.000
Y	0.000	-839.481	-839.481	2000.000	2000.000	0.000
Z	0.000	-1.024	-1.024	0.200	0.200	0.824
D	210.300	210.474	0.174	0.200	0.200	0.000
RN	0.000	0.087	0.087	0.200	0.000	0.000

MM DIM LOC_CC7= LOCATION OF CIRCLE CIRC_CAV_3_1

AX	NOMINAL	MEAS	DEV	+TOL	-TOL	OUTTOL
X	0.000	0.371	0.371	0.200	0.200	0.171
Y	0.000	-736.646	-736.646	2000.000	2000.000	0.000
Z	0.000	-1.448	-1.448	0.200	0.200	1.248
D	210.300	210.550	0.250	0.200	0.200	0.050
RN	0.000	0.188	0.188	0.200	0.000	0.000

MM DIM LOC_CC8= LOCATION OF CIRCLE CIRC_CAV_3_2

AX	NOMINAL	MEAS	DEV	+TOL	-TOL	OUTTOL
X	0.000	0.429	0.429	0.200	0.200	0.229
Y	0.000	-724.355	-724.355	2000.000	2000.000	0.000
Z	0.000	-1.458	-1.458	0.200	0.200	1.258
D	210.300	210.491	0.191	0.200	0.200	0.000
RN	0.000	0.166	0.166	0.200	0.000	0.000

MM DIM LOC_CC9= LOCATION OF CIRCLE CIRC_CAV_4_1

AX	NOMINAL	MEAS	DEV	+TOL	-TOL	OUTTOL
X	0.000	0.522	0.522	0.200	0.200	0.322
Y	0.000	-621.384	-621.384	2000.000	2000.000	0.000
Z	0.000	-1.671	-1.671	0.200	0.200	1.471
D	210.300	210.563	0.263	0.200	0.200	0.063
RN	0.000	0.225	0.225	0.200	0.000	0.025

MM DIM LOC_CC10= LOCATION OF CIRCLE CIRC_CAV_4_2

AX	NOMINAL	MEAS	DEV	+TOL	-TOL	OUTTOL
X	0.000	0.559	0.559	0.200	0.200	0.359
Y	0.000	-609.732	-609.732	2000.000	2000.000	0.000
Z	0.000	-1.689	-1.689	0.200	0.200	1.489
D	210.300	210.463	0.163	0.200	0.200	0.000
RN	0.000	0.226	0.226	0.200	0.000	0.026

MM DIM LOC_CC11= LOCATION OF CIRCLE CIRC_CAV_5_1

AX	NOMINAL	MEAS	DEV	+TOL	-TOL	OUTTOL
X	0.000	0.876	0.876	0.200	0.200	0.676
Y	0.000	-506.727	-506.727	2000.000	2000.000	0.000
Z	0.000	-1.783	-1.783	0.200	0.200	1.583
D	210.300	210.553	0.253	0.200	0.200	0.053
RN	0.000	0.114	0.114	0.200	0.000	0.000

PART NUMBER=PN440004-n-Trans-Rings-000-TB9ACC011-v1-IR DATE=9/22/2009 TIME=9:40:38 AM

MM DIM LOC_CC12= LOCATION OF CIRCLE CIRC_CAV_5_2

AX	NOMINAL	MEAS	DEV	+TOL	-TOL	OUTTOL
X	0.000	0.919	0.919	0.200	0.200	0.719
Y	0.000	-494.539	-494.539	2000.000	2000.000	0.000
Z	0.000	-1.756	-1.756	0.200	0.200	1.556
D	210.300	210.424	0.124	0.200	0.200	0.000
RN	0.000	0.149	0.149	0.200	0.000	0.000

MM DIM LOC_CC13= LOCATION OF CIRCLE CIRC_CAV_6_1

AX	NOMINAL	MEAS	DEV	+TOL	-TOL	OUTTOL
X	0.000	1.151	1.151	0.200	0.200	0.951
Y	0.000	-392.087	-392.087	2000.000	2000.000	0.000
Z	0.000	-1.805	-1.805	0.200	0.200	1.605
D	210.300	210.622	0.322	0.200	0.200	0.122
RN	0.000	0.200	0.200	0.200	0.000	0.000

MM DIM LOC_CC14= LOCATION OF CIRCLE CIRC_CAV_6_2

AX	NOMINAL	MEAS	DEV	+TOL	-TOL	OUTTOL
X	0.000	1.117	1.117	0.200	0.200	0.917
Y	0.000	-379.364	-379.364	2000.000	2000.000	0.000
Z	0.000	-1.868	-1.868	0.200	0.200	1.668
D	210.300	210.553	0.253	0.200	0.200	0.053
RN	0.000	0.232	0.232	0.200	0.000	0.032

MM DIM LOC_CC15= LOCATION OF CIRCLE CIRC_CAV_7_1

AX	NOMINAL	MEAS	DEV	+TOL	-TOL	OUTTOL
X	0.000	1.103	1.103	0.200	0.200	0.903
Y	0.000	-276.567	-276.567	2000.000	2000.000	0.000
Z	0.000	-1.617	-1.617	0.200	0.200	1.417
D	210.300	210.566	0.266	0.200	0.200	0.066
RN	0.000	0.144	0.144	0.200	0.000	0.000

MM DIM LOC_CC16= LOCATION OF CIRCLE CIRC_CAV_7_2

AX	NOMINAL	MEAS	DEV	+TOL	-TOL	OUTTOL
X	0.000	1.151	1.151	0.200	0.200	0.951
Y	0.000	-264.049	-264.049	2000.000	2000.000	0.000
Z	0.000	-1.590	-1.590	0.200	0.200	1.390
D	210.300	210.487	0.187	0.200	0.200	0.000
RN	0.000	0.215	0.215	0.200	0.000	0.015

MM DIM LOC_CC17= LOCATION OF CIRCLE CIRC_CAV_8_1

AX	NOMINAL	MEAS	DEV	+TOL	-TOL	OUTTOL
X	0.000	0.905	0.905	0.200	0.200	0.705
Y	0.000	-160.873	-160.873	2000.000	2000.000	0.000
Z	0.000	-1.180	-1.180	0.200	0.200	0.980
D	210.300	210.690	0.390	0.200	0.200	0.190
RN	0.000	0.050	0.050	0.200	0.000	0.000

PART NUMBER=PN440004-n-Trans-Rings-000-TB9ACC011-v1-IR DATE=9/22/2009 TIME=9:40:38 AM

MM	DIM LOC_CC18= LOCATION OF CIRCLE CIRC_CAV_8_2					
AX	NOMINAL	MEAS	DEV	+TOL	-TOL	OUTTOL
X	0.000	0.828	0.828	0.200	0.200	0.628
Y	0.000	-149.590	-149.590	2000.000	2000.000	0.000
Z	0.000	-1.143	-1.143	0.200	0.200	0.943
D	210.300	210.528	0.228	0.200	0.200	0.028
RN	0.000	0.064	0.064	0.200	0.000	0.000

MM	DIM LOC_CC19= LOCATION OF CIRCLE CIRC_CAV_9_1					
AX	NOMINAL	MEAS	DEV	+TOL	-TOL	OUTTOL
X	0.000	0.441	0.441	0.200	0.200	0.241
Y	0.000	-46.264	-46.264	2000.000	2000.000	0.000
Z	0.000	-0.527	-0.527	0.200	0.200	0.327
D	210.300	210.537	0.237	0.200	0.200	0.037
RN	0.000	0.183	0.183	0.200	0.000	0.000

MM	DIM LOC_CC20= LOCATION OF CIRCLE CIRC_CAV_9_2					
AX	NOMINAL	MEAS	DEV	+TOL	-TOL	OUTTOL
X	0.000	0.369	0.369	0.200	0.200	0.169
Y	0.000	-34.360	-34.360	2000.000	2000.000	0.000
Z	0.000	-0.460	-0.460	0.200	0.200	0.260
D	210.300	210.595	0.295	0.200	0.200	0.095
RN	0.000	0.187	0.187	0.200	0.000	0.000

Location of End Flanges

MM	DIM LOC_23= LOCATION OF CIRCLE CIR_END_FLANGE_MC					
AX	NOMINAL	MEAS	DEV	+TOL	-TOL	OUTTOL
X	0.000	-0.164	-0.164	0.200	0.200	0.000
Y	0.000	115.986	115.986	2000.000	2000.000	0.000
Z	0.000	0.441	0.441	0.200	0.200	0.241
D	140.000	140.022	0.022	0.300	0.300	0.000
RN	0.000	0.008	0.008	0.200	0.000	0.000

MM	DIM LOC_24= LOCATION OF CIRCLE CIR_END_FLANGE_FP					
AX	NOMINAL	MEAS	DEV	+TOL	-TOL	OUTTOL
X	0.000	0.145	0.145	0.200	0.200	0.000
Y	-1153.884	-1115.829	38.056	2000.000	2000.000	0.000
Z	0.000	0.709	0.709	0.200	0.200	0.509
D	140.000	140.045	0.045	0.300	0.300	0.000
RN	0.000	0.009	0.009	0.200	0.000	0.000

PART NUMBER=PN440004-n-Trans-Rings-000-TB9ACC011-v1-IR DATE=9/22/2009 TIME=9:40:38 AM

""

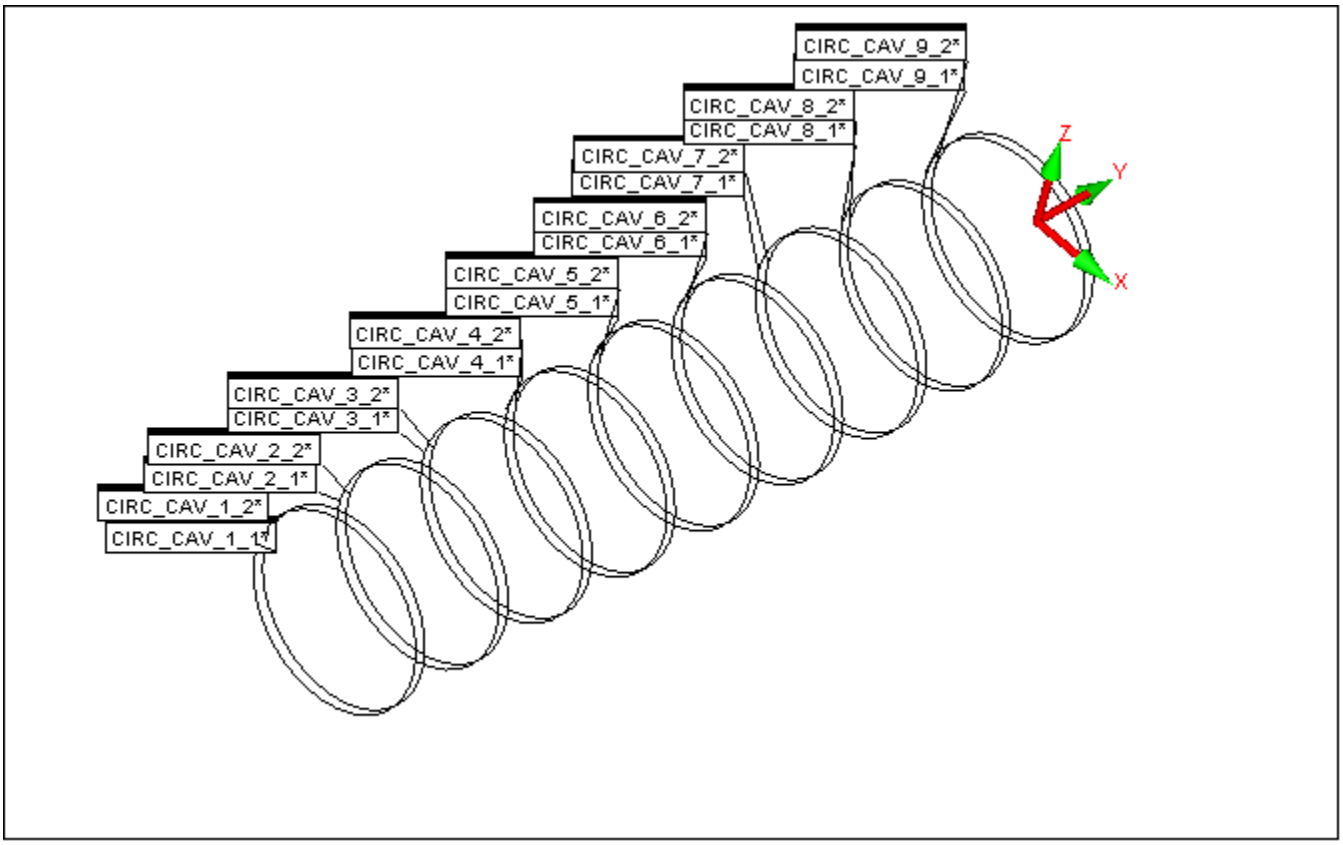

""

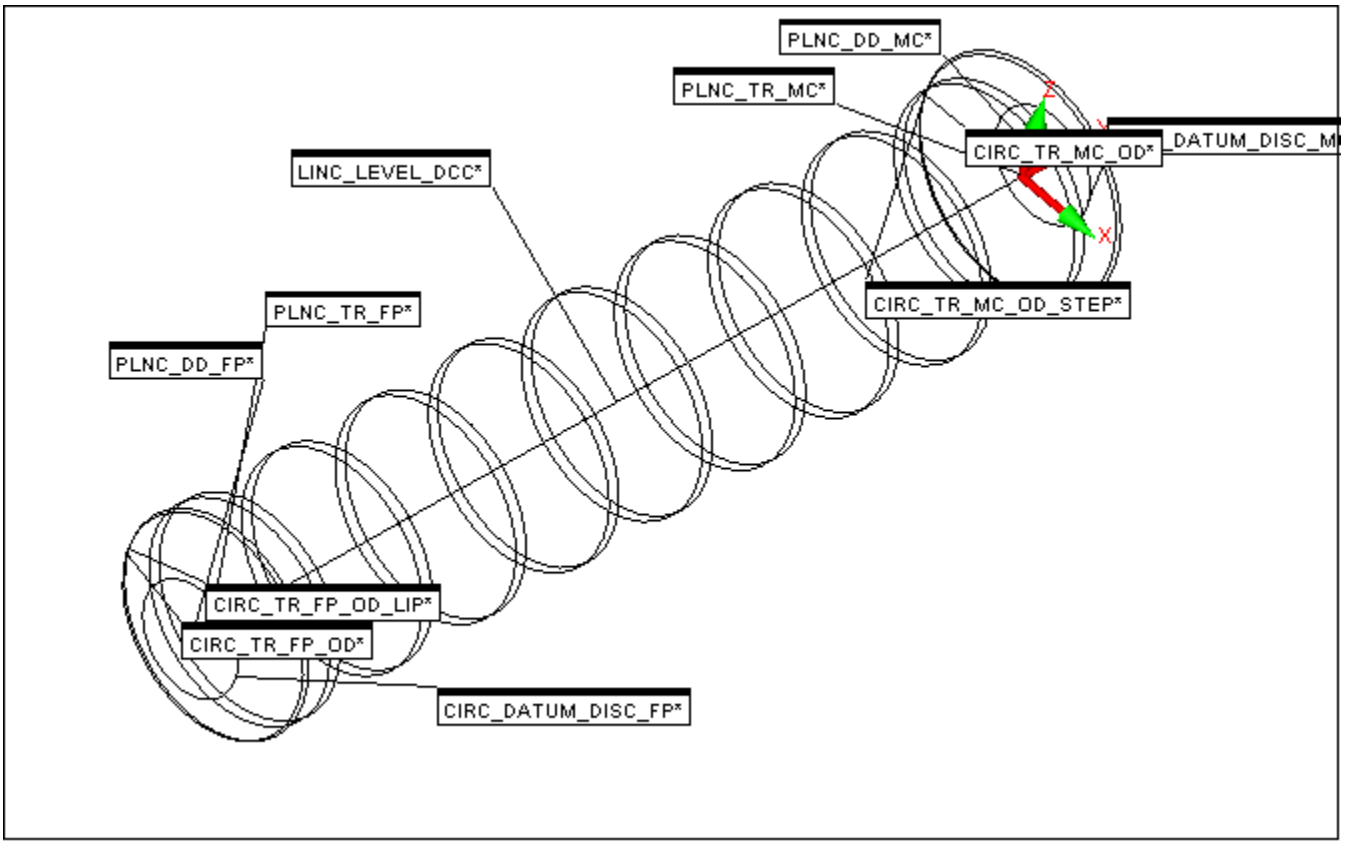

END OF MEASUREMENT FOR

PN=PN440004-n-Trans-Rings-000-TB9ACC011-v1-IR DWG= SN =

PART NUMBER=PN440004-n-Trans-Rings-000-TB9ACC011-v1-IR DATE=9/22/2009 TIME=9:40:38 AM
TOTAL # OF MEAS =0 # OUT OF TOL =0