REV	DESCRIPTION	DRAWN / APPROVED	DATE / DATE
	F R #6523		
A	ECO-8826 ROTATED ITEMS-1 & 4 90°	G. DAVIS T. PAGE	04-OCT-2007 10-OCT-2007
B	ECO-8892 RELOCATED LEAD LNE. REVERSED ITEMS 5&4. ADDED FINISHED BORE. ADDED WIRING SCHEME. REVISED ALL NOTES.	G. DAVIS	15 NOV 07
		I. TERECHKINE	16-NOV-07
C	REV ITEM NO 2 & NOTE NO 2 ECO NO 9030	S. L. MEREDITH T. PAGE	15-APR-2008 6-APR-2008
D	ECO-9106 NEW NOTE-4. OLD NOTES 4-5&6 - NOW 5-6&7. NEW NOTE-8. OLD NOTE-7 IS NOW NOTE 9.	G. DAVIS	26-JUN-08
		I. TERECHKINE	26-JUN-08
E	REV. ITEM NO 2 ECO NO. 9116	S. L. MEREDITH T. PAGE	5-AUG-2008 15-SEP-2008
F	ECO #9291 REVOVED (±) P S.. CHG'D OUTER LEAD TO INNER	G. DAVIS	21-JAN-2009

Serial Number: 1112

#1 .3268
#2 .3262
#3 .3266
#4 .3260
#5 .3252
#6 .3235
#7 .3248
#8 .3276

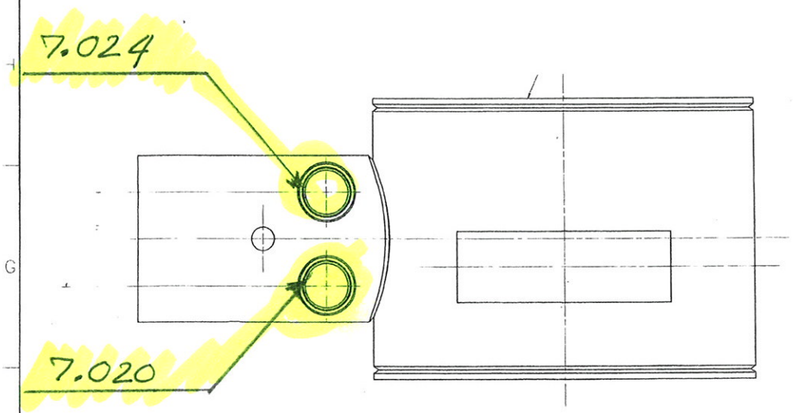

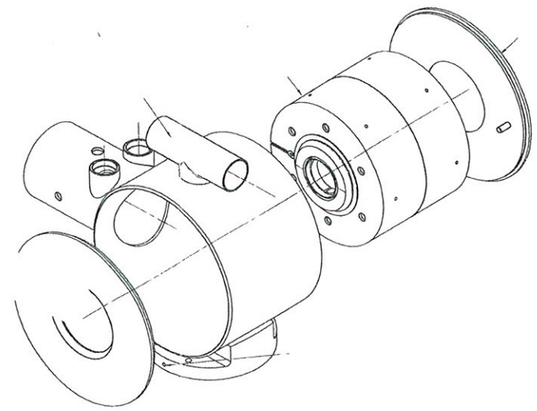

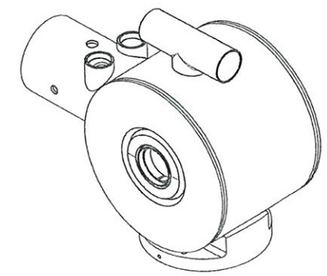

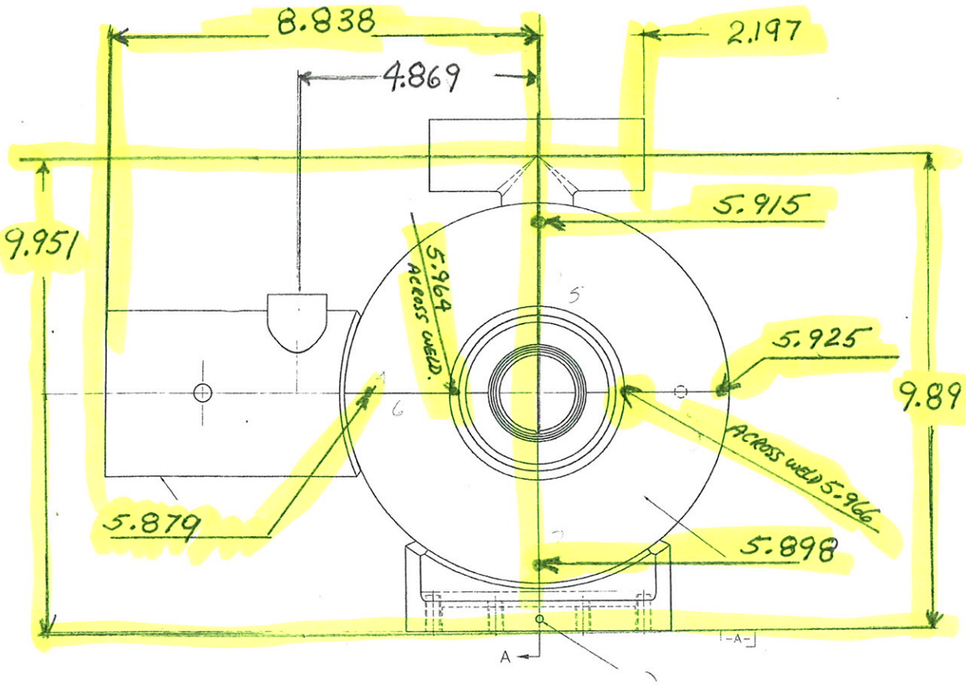

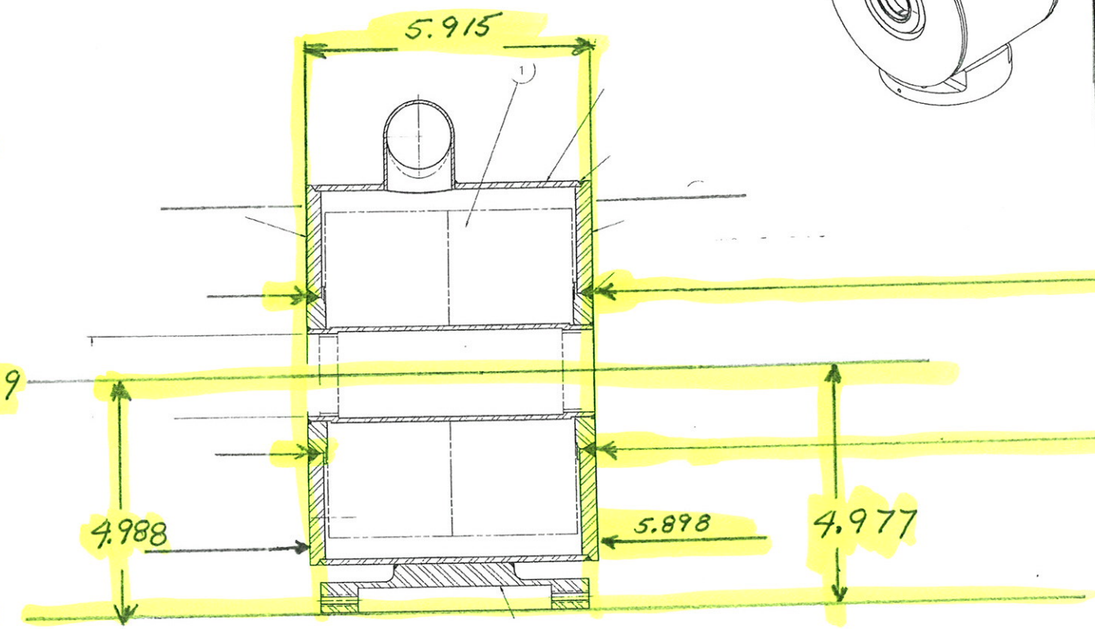

ITEM	PART NO	DESCRIPTION OR S ZE	QTY
5	MA-393436	SET SCR. #10-28X3/8" S"N STL.	2
4	MD-457117	LOCK PLATE ASSEMBLY	1
3	ME-441949	HE VESSEL END PLATE	1
2	ME-441940	HE VESSEL SUB-ASSEMBLY	1
	ME-442761	SOLENOID ASSEMBLY	1

PARTS L'ST

UNLESS OTHERWISE SPECIFIED			ORIGINATOR	I. TERECHKINE	
X	XX	ANGLES	DRAWN	G. DAVIS	27-JUN-2007
± .2	± .13	±	CHECKED	J. BRANDT	28-JUN-2007
			APPROVED	J. BRANDT	28-JUN-2007

1. BREAK ALL SHARP EDGES .015 MAX
2. DO NOT SCALE DRAWING
3. DIMENSIONS BASED UPON ASME Y14.5M-1994
4. MFG. ALL MACH SURFACES 125 √
5. DRAWING UNITS METRIC

LISTED ON: MD-457134
MATERIAL: SEE PARTS LIST

FERMI NATIONAL ACCELERATOR LABORATORY
UNITED STATES DEPARTMENT OF ENERGY

HINS - FRONT END
CH-SECTION FOCUSING SOLENOID
TYPE-1 COLD-MASS ASSEMBLY

SCALE	DRAWING NUMBER	SHEET	REV
1:1	5520.000-ME-442963	1 OF 1	F

CREATED WITH: IdeasMCAD Series | GROUP: TEVDOCIS-DESIGN-COMPUTING

Created 07 57 32 on 29-01-09 (D-M-Y) By gordavis State 1-INITIAL