REV.	DESCRIPTION	DRAWN / APPROVED	DATE / DATE
	ER # 8944 NEW RELEASE		
A	ECO-9926: REMOVED ITEM #12, WAS MA-393481 SHCS Ø 25-20 X 5.00LG-SS QTY(4); ADDED ITEMS #15 & #16	JWJ / A.MAKAROV	15-NOV-10 / 02-DEC-10
B	ECO#10225 REMOVED ITEM 16 (ME 482028) PICTORIAL UPDATE		11/3/11 / 11/3/11

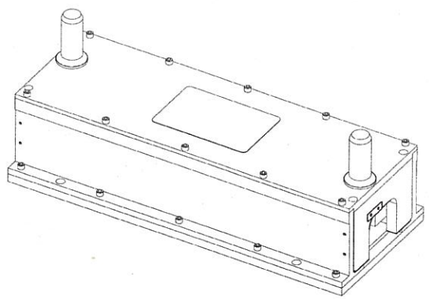

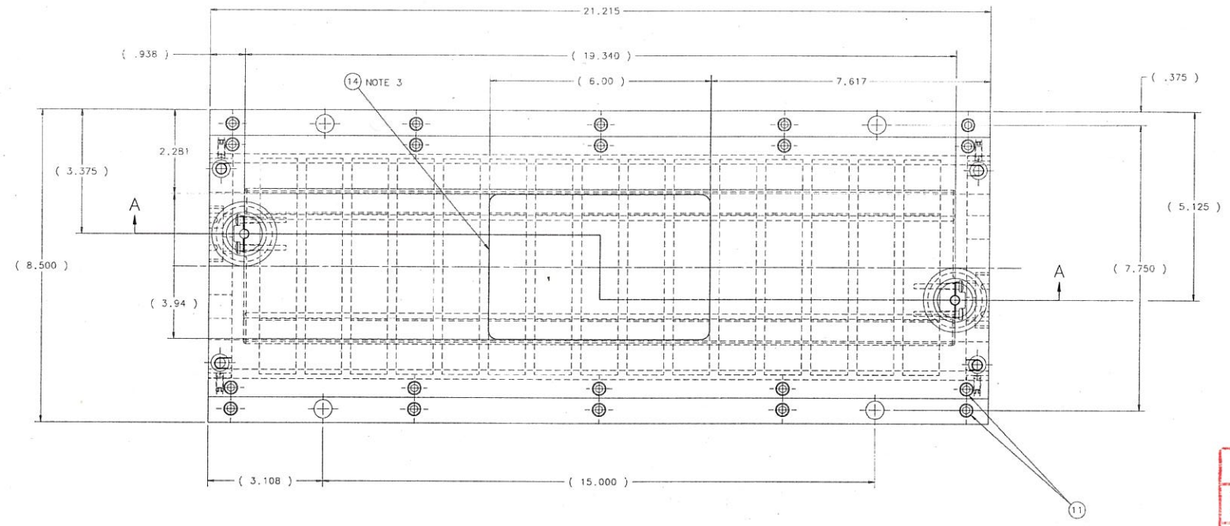

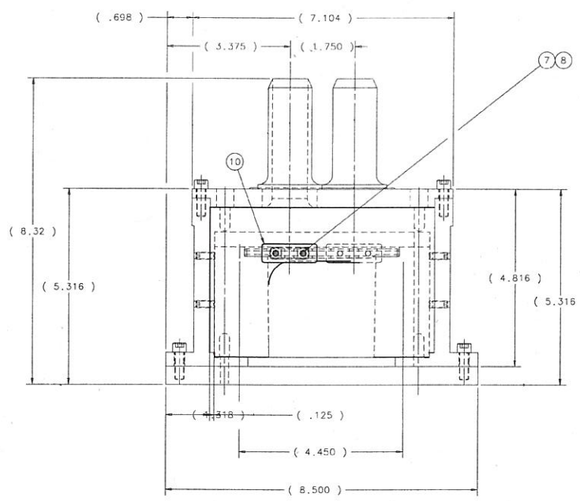

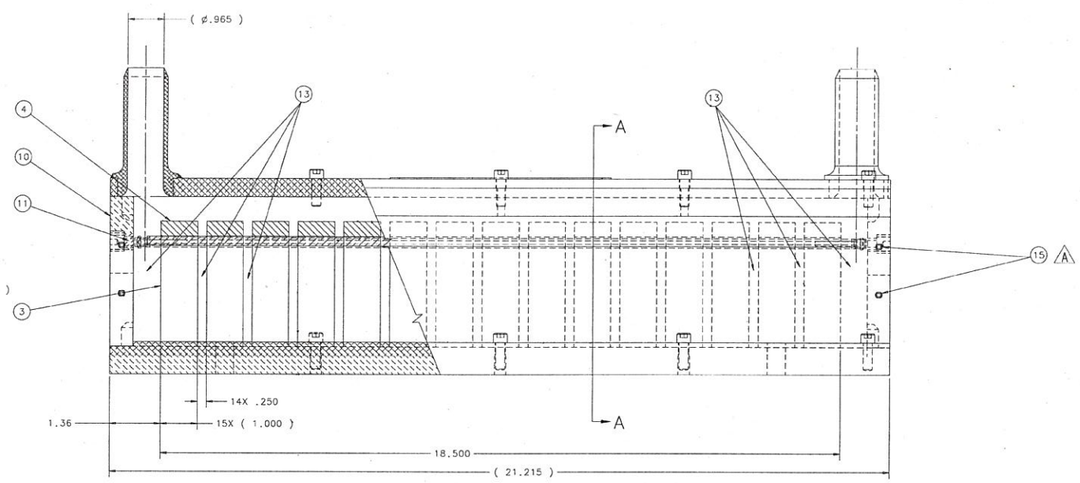

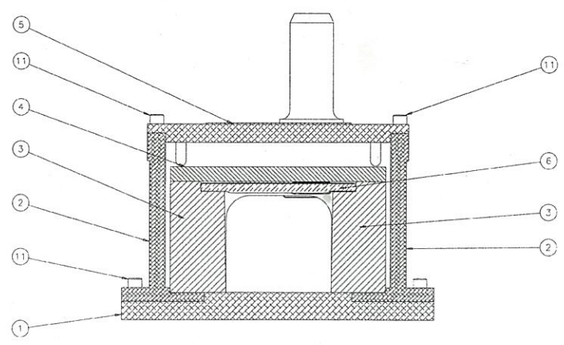

SECTION A-A
SCALE 3/4

NOTES (UNLESS OTHERWISE SPECIFIED):

1. PART MUST BE FREE OF DIRT, GREASE, OIL, CHIP OR BURRS AND PACKAGED CLEAN FOR DELIVERY.
2. PART TO BE FREE OF ALL SHARP EDGES, CORNERS AND BURRS.
3. AFFIX A MAGNET IDENTIFICATION LABEL(ITEM 14) ON THE MODULE AS SHOWN.

OK for Production

Magnet Series	BKEE
Magnet Numbers	BKEE002-BKEE008
Comments	
Approved	Date 2/24/12

ITEM	PART NO.	DESCRIPTION OR SIZE	QTY.
16			
15	MA-482027	SCREW-SET #10-24X.50-SST	8
14	MA-318490	MAGNET IDENTIFICATION LABEL	1
13	MA-393482	SILICONE RUBBER POTTING COMPOUND	A/R
12			
11	MA-393882	SHCS 1/4-20UNC-2A X 3/4 LG-SS	20
10	MB-481592	END PLATE PLUG	2
9	MB-481591	END PLATE	2
8	MA-481594	PHMS #8-32X.50-SST	4
7	MA-400695	WIRE CLAMP	2
6	MA-481590	CENTER CONDUCTOR	1
5	MD-481588	COVER PLATE ASSY	1
4	MB-400692	TOP PIECE-MAGNET(FERRITE)	15
3	MB-400691	SIDE PIECE(FERRITE)	30
2	MD-481587	SIDE PLATE	2
1	MD-481586	BASE PLATE	1

PARTS LIST

UNLESS OTHERWISE SPECIFIED			ORIGINATOR	A.MAKAROV	25-APR-2010
.XX	.XXX	ANGLE	DRAWN	J.JABLONSK	11-MAY-2010
± .02	± .005	± --	CHECKED	M.KRAMP	28-JUN-2010
			APPROVED	A.MAKAROV	25-JUN-2010

1. BREAK ALL SHARP EDGES .02 MAX.
2. DO NOT SCALE DRAWING.
3. DIMENSIONS BASED UPON ASME Y14.5M-1994.
4. MAX. ALL MACH. SURFACES 125
5. DRAWING UNITS:U.S.INCH

USED ON: ME-481580

MATERIAL: SEE PARTS LIST

FERMI NATIONAL ACCELERATOR LABORATORY
UNITED STATES DEPARTMENT OF ENERGY

BOOSTER FAST KICKER MAGNET
BKED-S FAST KICKER MAGNET
MODULE ASSEMBLY

SCALE	DRAWING NUMBER	SHEET	REV
3:4	5520.000-ME-481581	1 OF 1	B

CREATED WITH: Ideas12NXSer es | GROUP: "D/DDCIS-DESIGN-COMPUTING