OK for Production	
Magnet Series	RKB
Magnet Numbers	RKB003-RKB008
Comments	
Approved	Date 10/26/12

REV	DESCRIPTION	DRAWN / APPROVED	DATE
A	UPDATED PER CHANGES RESULTING FROM A DECREASE IN THE LENGTH OF THE CERAMIC BEAMTUBE AS PER ECO# 10029	DGH / R.REILLY	22-MAR-2011 / 20-APR-2011
B	ADDED FERMILAB PART NUMBERS FOR COMMONLY PURCHASED HARDWARE AS PER ECO# 10158	DGH / R.REILLY	13-SEP-2011 / 21-SEP-2011
C	ECO #10321 ITEM 62 WAS ITEM 25, ADDED NEW ITEM 25, QTY OF ITEMS 13 & 17 WAS 6, DIM 9.25 WAS 8.75	J. KURNAT / W. ROSOTHAM	04MAR2012 / 04MAY2012

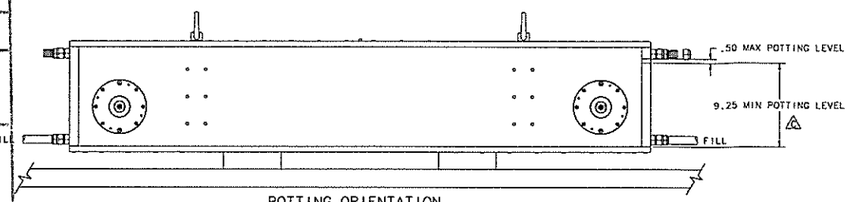

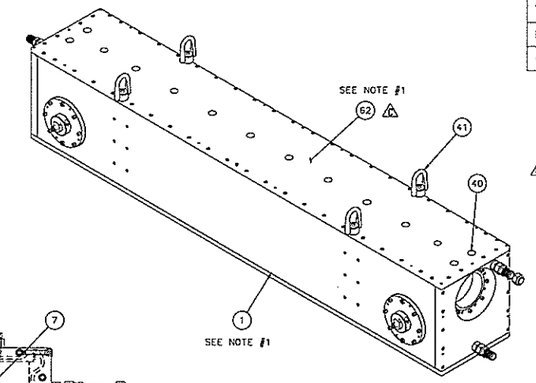

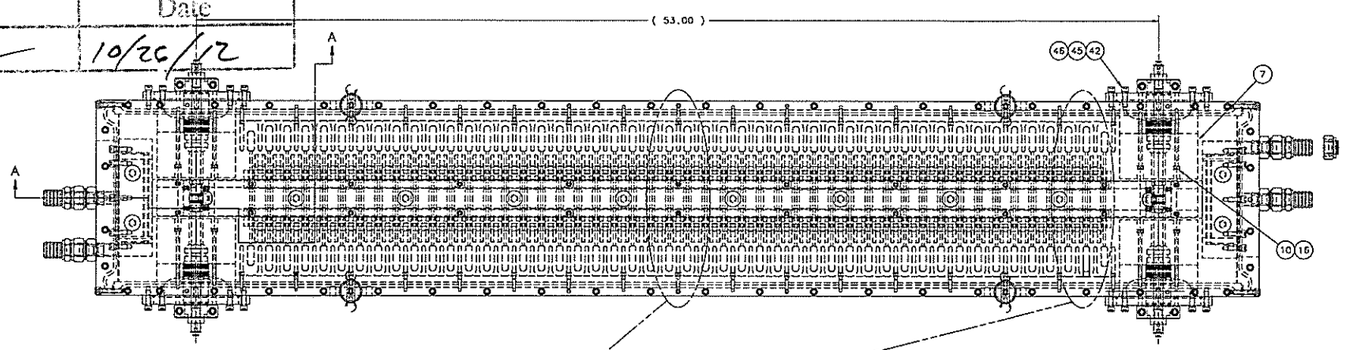

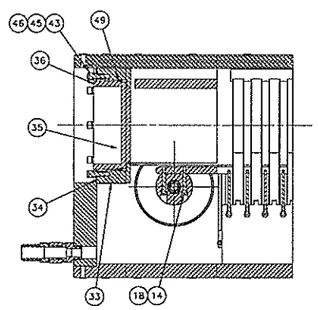

SECTION A-A

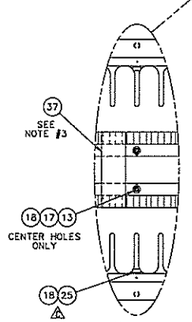

DETAIL 1
SCALE:1/2

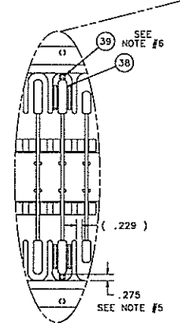

DETAIL 2
SCALE:1/2

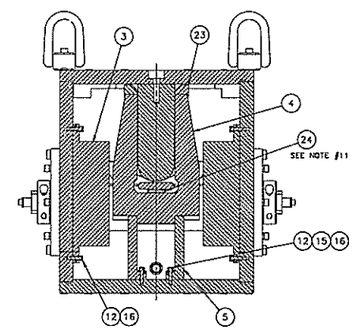

SECTION B-B

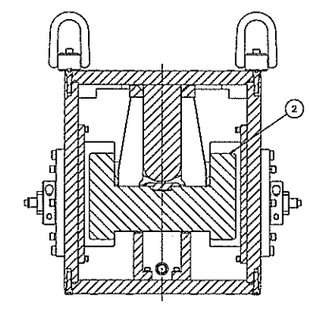

SECTION C-C

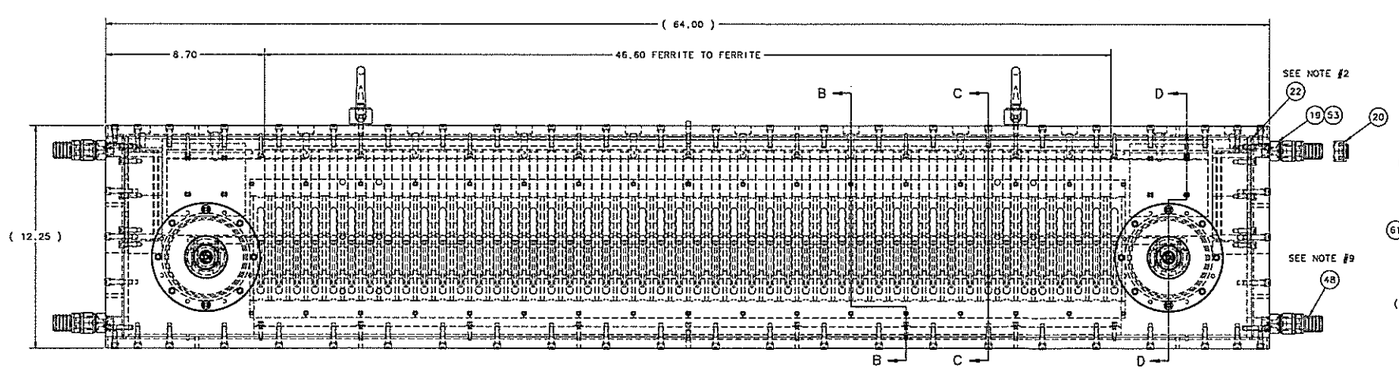

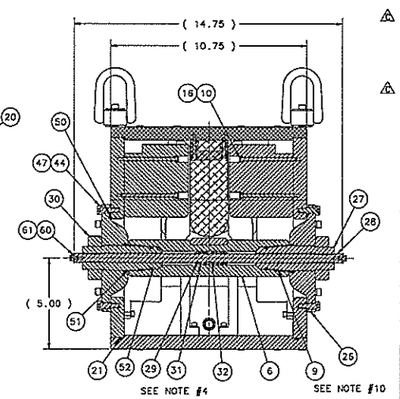

SECTION D-D

ITEM	PART NO.	DESCRIPTION OR SIZE	QTY.
62	MD-460106	POTTING MANDREL ASSEMBLY	(1)
61	MA-458202	#10 FLAT WASHER, BRASS	(4)
60	MA-458201	SHCS #10-32 UNF X .25" LG, BRASS	(4)
59	MA-459259	DOW CORNING 1200 OS PRIMER CLEAR	AS REQ'D
58	MA-459090	MANN 2508 MOLD CLEANER	AS REQ'D
57	MA-459089	MANN ER200 MOLD RELEASE AGENT	AS REQ'D
56	MA-318765	GENERAL ELECTRIC RTV-157	AS REQ'D
55	MA-459088	DOW CORNING SILICONE HIGH VACUUM GREASE COMPOUND #976V	AS REQ'D
54	MA-393599	DOW CORNING SILICONE ELASTOMER SYLGARD 184	13-KITS
53	MA-459092	O-RING ø.644 OD X .087 NOM. VITON 75	(4)
52	MA-459447	O-RING ø1.045 OD X .139 NOM. VITON 75	(4)
51	MA-459080	O-RING ø1.359 OD X .139 NOM. VITON 75	(4)
50	MA-459079	O-RING ø4.484 OD X .139 NOM. VITON 75	(4)
49	MA-459078	O-RING ø4.734 OD X .139 NOM. VITON 75	(2)
48	MA-459217	MALE ADAPTOR 3/4" TUBE	(4)
47	MA-459103	SHOULDER SCREW SHIM ø.438 OD X .314 ID X .020 THK, S.S.	(8)
46	MA-457666	BEARING SHIM ø.373 OD X .253 ID X .020 THK, S.S.	(40)
45	MA-457664	1/4" LOCK WASHER FOR SHCS, S.S.	(40)
44	MA-457893	SHOULDER SCREW ø.312 X .50" LG, S.S.	(8)
43	MA-212579	SHCS #1/4-20 UNC X .75" LG, S.S.	(16)
42	MA-457709	SHCS #1/4-20 UNC X .88" LG, S.S.	(24)
41	MA-459451	HOIST RING .25-20	(4)
40	MA-459082	SELF SEALING HHCS 3/8-16 X 1.00" LG, S.S.	(4)
39	MD-460870	CAPACITOR END SPACER BLOCK	(6)
38	MD-460869	CAPACITOR SIDE SPACER BLOCK	(12)
37	MD-458193	FERRITE STOP SPACER BLOCK	(2)
36	MD-460970	POTTING WINDOW SPACER	(2)
35	MD-458254	WINDOW	(2)
34	MD-458243	WASHER, SPACER (RUBBER)	(2)
33	MD-460914	POTTING END SPACER	(2)
32	MA-459027	.544 I.D. CANTED COIL SPRING	(4)
31	MD-457785	SPACER, SLEEVE	(2)
30	MA-459083	SHAFT COLLAR	(4)
29	MD-457981	SPECIAL NUT ø.500-13	(4)
28	MD-460728	THREADED ROD	(2)
27	MD-457783	NUT, POSITIONING ø.50-13 I.D.	(4)
26	MC-458063	OUTER MOLD	(4)
		TOOLING LISTED ABOVE	
25	MA-485022	SHLR SCR-SH ø.188 X .625 LG 8-32	4
24	MD-482096	SYLGARD CAPACITOR SPACER	9
23	MC-460868	FERRITE TOP SPACER BLOCK	2
22	MA-459076	SQUARE O-RING CORD STOCK 4 PIECES 13" LONG	(4)
21	MA-460071	VITON O-RING CORD STOCK ø1/8 NOM. CROSS-SECTION, 146.54" LG.	(2)
20	MA-459449	SWAGELOK PLUG SS-1210-P (REMOVE NUT FERRULES, FITS 3/4" BORE SEAL PORT)	4
19	MA-459077	MALE CONNECTOR 3/4" TUBE	4
18	MA-457663	#10 LOCK WASHER FOR SHCS, S.S.	14
17	MA-457665	BEARING SHIM ø.310 OD X .206 ID X .020 THK, S.S.	2
16	MA-457662	#8 LOCK WASHER FOR SHCS, S.S.	118
15	MA-400631	#8 FLAT WASHER, S.S.	16
14	MA-457880	SHOULDER SCREW ø.188 X 1.00" LG, S.S.	8
13	MA-457653	SHOULDER SCREW ø.188 X .50" LG, S.S.	2
12	MA-457199	SHCS #8-32 UNC X .75" LG, S.S.	80
11	MA-458721	SHCS #8-32 UNC X 1.00" LG, S.S.	22
10	MA-482763	SHCS #8-32 UNC X 3.00" LG, S.S.	16
9	MD-458198	CONTACT BAND MALE	4
8	MD-459765	LOW VOLTAGE BUS	1
7	MD-459742	END FILLER BLOCK	4
6	MC-459741	LOAD RECEPTACLE	2
5	MD-459740	FERRITE STOP	2
4	MC-459739	KICKER FERRITE	47
3	MD-459738	CAPACITOR DIVIDER	2
2	MD-459737	HIGH VOLTAGE BUS ASSEMBLY	1
1	MD-459661	MAGNET CASE PROCUREMENT ASSEMBLY	1

PARTS LIST

UNLESS OTHERWISE SPECIFIED	ORIGINATOR	C.JENSEN	01-DEC-2009
.XX ± .03, .XXX ± .005, ANGLES ± 1°	DRAWN	D.HURD	01-DEC-2009
	CHECKED	R.REILLY	20-DEC-2010
1. BREAK ALL SHARP EDGES .02 MAX	APPROVED	R.REILLY	20-DEC-2010
2. DO NOT SCALE DRAWING. 3. DIMENSIONS BASED UPON ASME Y14.5M-1994	USED ON	ME-481283 ME-481284	
4. MAX. ALL MACH. SURFACES 125	MATERIAL	SEE PARTS LIST	
5. DRAWING UNITS: U.S. INCH			

FERMI NATIONAL ACCELERATOR LABORATORY
UNITED STATES DEPARTMENT OF ENERGY

RECYCLER NOVA UPGRADE (ANU) RKB - 25 OHM HORIZONTAL KICKER POTTING ASSEMBLY

SCALE	DRAWING NUMBER	SHEET	REV
3/8	5520.000-ME-460906	1 OF 2	C

CREATED WITH : Ideas12NXSeries | GROUP: TD/SDCIS-DESIGN-COMPUTING

NOTES:

1. REMOVE ONE SIDE PLATE FROM MD-459661 (ITEM #1). THIS PLATE HAS THE LOW VOLTAGE BUS (ITEM #8) ATTACHED. REPLACE WITH POTTING MANDREL ASSEMBLY MD-460106 (ITEM #24). THIS PART IS USED FOR POTTING ONLY.
2. APPLY SYLGARD 184 (ITEM #54) TO AREA WHERE O-RINGS (ITEMS #13 & #14) CROSS OVER. (8 PLACES) LEAVE TO CURE FOR 24 HOURS.
3. FERRITE STOP SPACER BLOCK (ITEM #37) IS USED TO INSURE CORRECT SPACING BETWEEN FERRITE STOPS (ITEM #5) SO THAT KICKER FERRITES (ITEM #4) FIT WHEN INSTALLED.
4. ASSEMBLE SPECIAL NUT, SPACER SLEEVE AND CANTED COIL SPRING (ITEMS #29, #31 & #32) TO CENTER OF THREADED ROD (ITEM #28) AND TIGHTEN. INSTALL THAT SUB-ASSEMBLY INTO POSITIONING NUT (ITEM #27), SLIDE INTO LOAD RECEPTACLE (ITEM #6).
5. CENTER HIGH VOLTAGE BUS ASSEMBLY (ITEM #2) BETWEEN CAPACITOR DIVIDERS (ITEM #3) SO THAT THERE IS A .275 GAP ON BOTH SIDES. LOCK IN PLACE WITH FOUR (4) SHAFT COLLARS (ITEM #30).
6. INSERT FOUR (4) CAPACITOR SIDE SPACER BLOCKS (ITEM #38) AND TWO (2) CAPACITOR END SPACER BLOCKS (ITEM #39) AT EACH END AS SHOWN. THEN TEST THAT THE CAPACITOR SPACER BLOCKS (ITEM #38 & #39) FIT INTO REMAINING GAPS.
7. FOR DETAILED ASSEMBLY PROCEDURE SEE ENGINEERING SPEC# 1303.000-ES-296436
8. FOR DETAILED POTTING PROCEDURE SEE ENGINEERING SPEC #1303.000-ES-296437.POTTING MANDREL ASSEMBLY, OUTER MOLD AND SPACER (ITEMS #23, #26 & #33) TO BE COATED WITH MANN ER200 MOLD RELEASE AGENT (ITEM #57) BEFORE POTTING.
9. AFTER POTTING, REMOVE MALE ADAPTOR (ITEM #48) AND REPLACE WITH PLUG (ITEM #20) AT ALL 4 LOCATIONS. MAKE SURE FERRULES ARE IN PLACE BEFORE ASSEMBLY.
10. INSTALL MALE CONTACT BAND (ITEM #9) IN FOUR (4) PLACES AFTER POTTING AND ELECTRICAL TESTING IS COMPLETE. REMOVE ANY SYLGARD FROM GROOVE IN LOAD RECEPTACLE (ITEM #6) BEFORE INSERTING MALE CONTACT BAND (ITEM #9).
11. PLACE SYLGARD CAPACITOR SPACER (ITEM #24) ON EVERY FEW FERRITES (ITEM #4) TO SUPPORT HIGH VOLTAGE BUS ASSEMBLY (ITEM #2) DURING POTTING. ATTACH SYLGARD CAPACITOR SPACER TO FERRITE USING A SMALL DAB OF SYLGARD.

OK for Production	
Magnet Series	RKB
Magnet Numbers	RKB003-RKB008
Comments	
Approved	Date
[signature]	10/26/12

REV	DESCRIPTION	DRAWN / APPROVED	DATE / DATE
A	UPDATED PER CHANGES RESULTING FROM A DECREASE IN THE LENGTH OF THE CERAMIC BEAMTUBE AS PER ECO# 10029	DGH / R.REILLY	22-MAR-2011 / 20-APR-2011
B	ADDED FERMILAB PART NUMBERS FOR COMMONLY PURCHASED HARDWARE AS PER ECO# 10158	DGH / R.REILLY	13-SEP-2011 / 21-SEP-2011
C	ECO #10321 ITEM 62 WAS ITEM 25, ADDED NEW ITEM 25, QTY OF ITEMS 13 & 17 WAS 6, DIM 9.25 WAS 8.75	J. KURNAT / W. ROBOTHAM	05MAR2012 / 04MAY2012

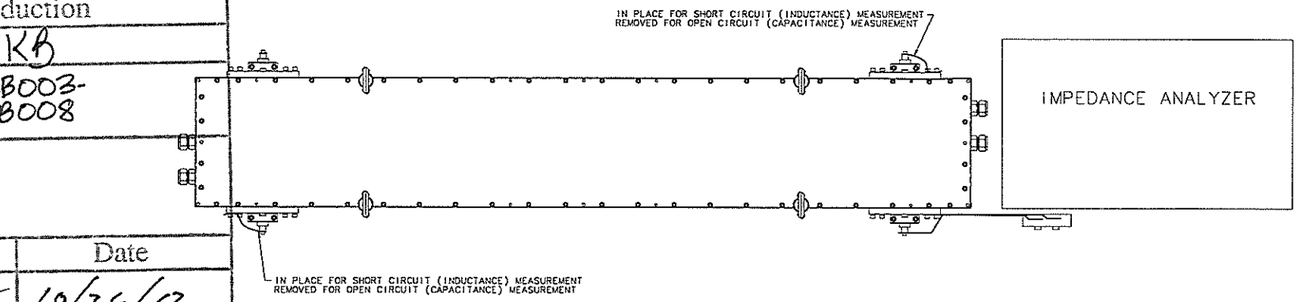

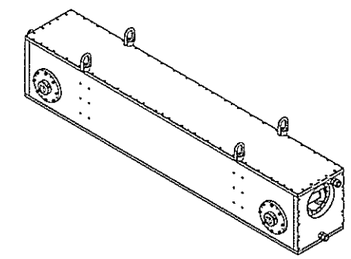

ELECTRICAL TESTING

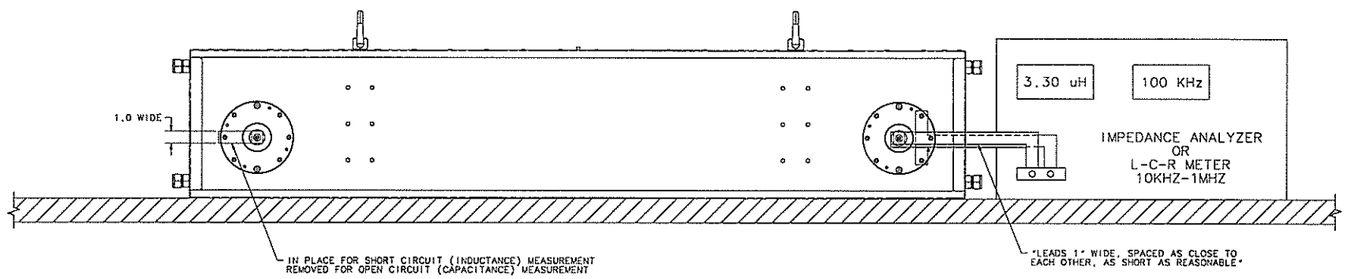

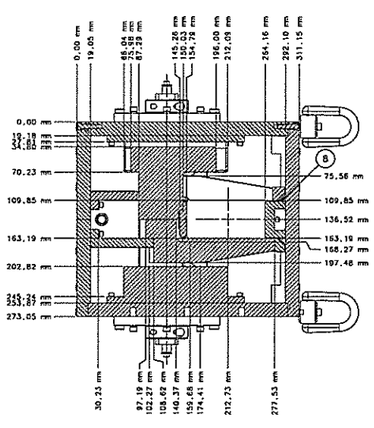

SECTION A-A

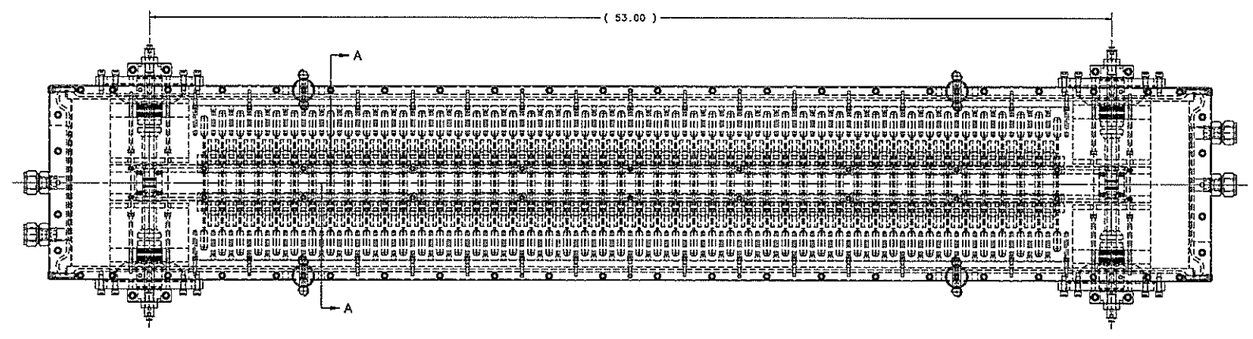

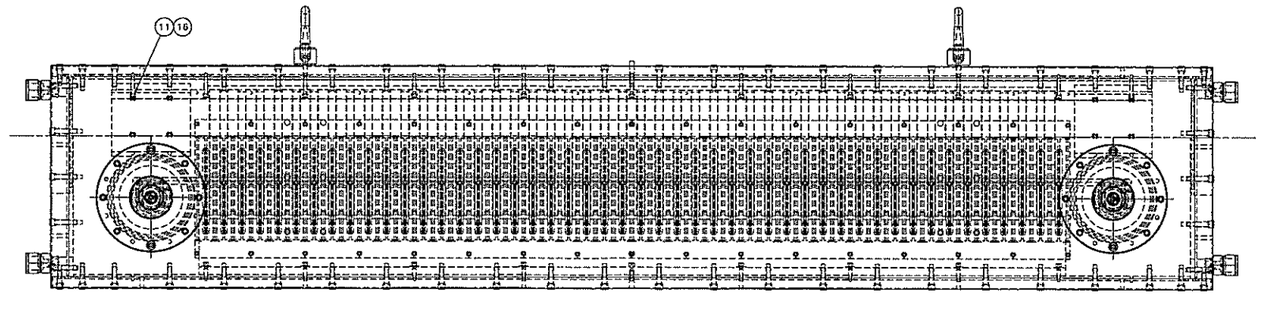

NOTES:

1. AFTER POTTING, REMOVE POTTING MANDREL ASSEMBLY (ITEM #24) AND RELATED POTTING TOOLING ON THE ENDS OF THE MAGNET (ITEMS #32, 34 & 35).
2. REPLACE WITH SIDE PLATE REMOVED PREVIOUSLY WITH THE LOW VOLTAGE BUS (ITEM #8).
3. PREFORM ELECTRICAL CHECK.
4. REMOVE REMAINING TOOLING (ITEMS #25, 26, 27, 28, 29, 30 & 31) AFTER ELECTRICAL TEST IS COMPLETE.

UNLESS OTHERWISE SPECIFIED			ORIGINATOR	C.JENSEN	01-DEC-2009
.XX	.XXX	ANGLES	DRAWN	D.HURD	01-DEC-2009
± .02	± .005	± 1°	CHECKED	R.REILLY	20-DEC-2010
			APPROVED	R.REILLY	20-DEC-2010

1. BREAK ALL SHARP EDGES .015 MAX.
2. DO NOT SCALE DRAWING.
3. DIMENSIONS BASED UPON ASME Y14.5M-1994
4. MAX. ALL MACH. SURFACES 125
5. DRAWING UNITS U.S. INCH

USED ON: ME-481283 ME-481284

MATERIAL: SEE PARTS LIST ON SHEET 1

FERMI NATIONAL ACCELERATOR LABORATORY
UNITED STATES DEPARTMENT OF ENERGY

RECYCLER NOVA UPGRADE (ANU)
RKB - 25 OHM HORIZONTAL KICKER
POTTING ASSEMBLY

SCALE	DRAWING NUMBER	SHEET	REV
3/8	5520.000-ME-460906	2 OF 2	C

CREATED WITH : Ideas12NXSeries | GROUP: TD/DDCIS-DESIGN-COMPUTING

Created: 08:54:09 on 07-05-12 (D-M-Y) By: kurnat State: 1-INITIAL