DESCRIPTION: RF TUNING SOLENOID ASSY
CATEGORY: ASSEMBLY PROJECT: NOVASolenoidMagnet

| REV | REVISION CONTROL DOCUMENT | DATES | SIGNATURES |
|---|---|---|---|
| - | F10002277---RCD | | DRAWN |
| | | | APPROVED |

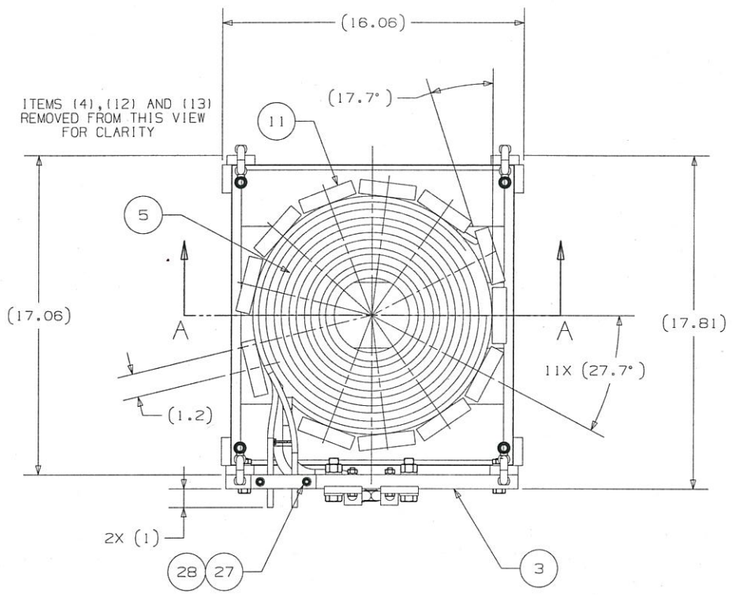


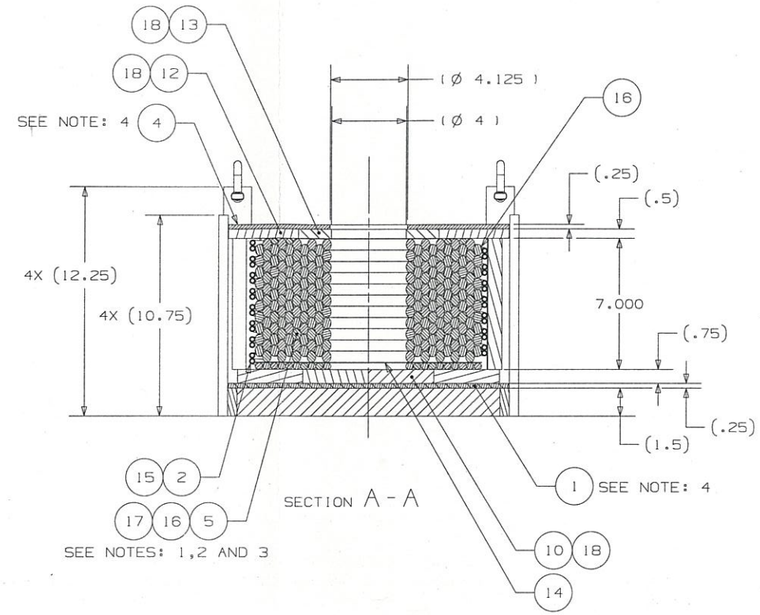


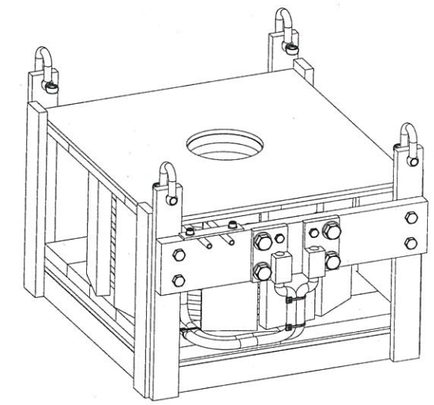

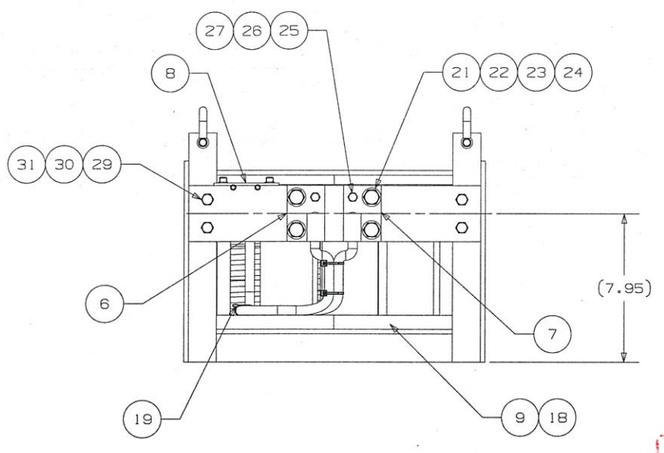


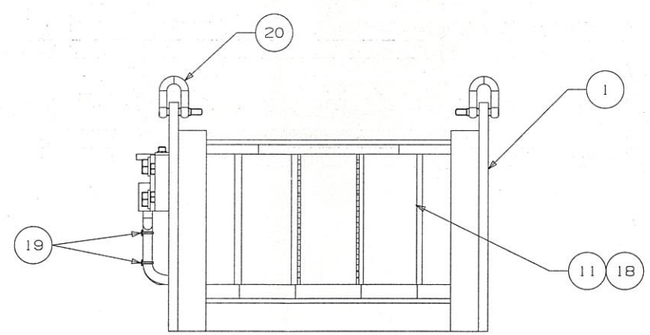


| ITEM | PART No. | DESCRIPTION | QTY |
|---|---|---|---|
| 31 | FC0016377 | WASHER-SPLIT,3/8-0.38x0.68x0.09,SS18-8 | 4 |
| 30 | FC0014134 | NUT-HEX,3/8-16x0.25,SS18-8 | 4 |
| 29 | FC0008568 | HHCS,3/8-16x1.625LGx1T,SS18-8 | 4 |
| 28 | FC0003343 | SHCS,1/4-20x0.5LGx1T,SS18-8 | 2 |
| 27 | FC0016375 | WASHER-SPLIT,1/4-0.254x0.49x0.06,SS18-8 | 4 |
| 26 | FC0014125 | NUT-HEX, 1/4-20x0.2188,SS18-8 | 2 |
| 25 | FC0008430 | HHCS,1/4-20x1.375LGx0.75T,SS18-8 | 2 |
| 24 | FC0014142 | NUT-HEX, 1/2-13x0.4375,SS18-8 | 4 |
| 23 | FC0016379 | WASHER-SPLIT,1/2-0.506x0.87x0.12,SS18-8 | 4 |
| 22 | FC0008673 | HHCS, 1/2-13x2LGxFT,SS18-8 | 4 |
| 21 | FC0015467 | WASHER,1/2-0.531x1x0.12,SS18-8 | 4 |
| 20 | FC0028141 | HIGH-STRENGTH D-SHACKLES, 3/8" STUD, #3824T35, McMASTER-CARR | 4 |
| 19 | FC0028143 | TIE WRAP. 4.1LG, .095W, .042THK | 3 |
| 18 | FC0028180 | ROOM CURE EPOXY MIX, #MA-274695, FERMI | A/R |
| 17 | FC0028179 | HEAT CURE EPOXY MIX, #MA-351120, FERMI | A/R |
| 16 | FC0028193 | TAPE, 1"WITH x .007"THK, FIBERGLAS, #MA-116511, FERMI | 7 ROLES |
| 15 | FC0028177 | SLEEVE, FIBERGLASS, 1/4"ID, 15/64" TO 17/64 BUNDAL DIA., #8819K44, McMASTER-CARR | 50 Ft |
| 14 | F10002548 | INSULATION PLATE | 1 |
| 13 | F10002257 | FERRITE BLOCK 3 | 1 |
| 12 | F10002256 | FERRITE BLOCK 2 | 6 |
| 11 | F10002263 | FERRITE BLOCK 4 | 12 |
| 10 | F10002278 | FERRITE BLOCK 5 | 4 |
| 9 | F10002255 | FERRITE BLOCK 1 | 8 |
| 8 | F10002287 | CLAMP, STRIP | 1 |
| 7 | F10002284 | CABLE TERMINAL, RIGHT SIDE | 1 |
| 6 | F10002282 | CABLE TERMINAL, LEFT SIDE | 1 |
| 5 | F10002264 | COIL, LITZ CABLE, 1/0 AWG 5x3x20/24, HEAVY POLUIMIDE, #FC0028196, FERMI | 250 Ft |
| 4 | F10002760 | PLATE, SOLENOID SUPPORT W/HOLE | 1 |
| 3 | F10002275 | BAR, CABLE TERMINAL SUPPORT | 1 |
| 2 | F10002265 | BIFILAR COOLING LINE | 1 |
| 1 | F10002252 | RF TUNING SOLENOID FRAME WELDMENT | 1 |

PART LIST

NOTES (UNLESS OTHERWISE SPECIFIED):

1. COIL ITEM (5) SHALL BE MADE FROM LITZ CABLE 1/0 AWG 5 X 3/20/24 HEAVY POLYIMIDE (MW35C) TO .533", +.013"/-.026" OD AND 250Ft LENGTH. EACH TURN SHALL BE INSULATED WITH 1 LAYER OF .007" THICK FIBERGLASS TAPE ITEM (18). EACH COIL LAYER SHALL BE WRAPPED WITH 1 LAYER 1/2 LAP OF .007" THICK FIBERGLAS TAPE.
2. COIL ITEM (5) SHALL BE WRAPPED WITH 3 LAYERS 1/2 LAP OF TAPE ITEM (16) (BETWEEN COOLING TUBE ITEM (2) AND COIL ITEM (5)), PLUS 2 LAYERS 1/2 LAP OF THE SAME TAPE OVER COOLING TUBE.
3. COIL ITEM (5) SHALL BE VACUUM IMPREGNATED WITH CURE EPOXY MIX ITEM (17) AND CURED. CURING CYCLE: 2HRS AT 200° F PLUS 12 HRS AT 250° F.
4. FERRITE BLOCKS ITEMS (9),(10),(12) AND (13) WILL BE GLUED TO ALUMINUM PLATE W/HOLE ITEM (4) AND ALUMINUM PLATE FROM ITEM (1) WITH ROOM CURE EPOXY MIX ITEM (18). FERRITE BLOCKS ITEM (11) SHALL BE GLUED TO TOP AND BOTTOM FERRITES ALSO WITH ROOM EPOXY MIX ITEM (18).

OK for Production

| | |
|---|---|
| Magnet Series | RFSOL |
| Magnet Numbers | RFSOL 001-RFSOL 004 |
| Comments | |
| Approved | Date 2/5/13 |

| UNLESS OTHERWISE SPECIFIED | | | | |
|---|---|---|---|---|
| ±.X | ±.XX | ±.XXX | ±X/X | ±X° |
| .1 | .02 | .005 | 1/16 | 1° |

BREAK ALL SHARP EDGES .015 MAX.
DO NOT SCALE DRAWING
DIMENSIONS BASED ON ASME Y14.5M-1994
MAX. ALL MACH SURFACES 125√
DRAWING UNITS: INCHES

| | | | |
|---|---|---|---|
| DRAWN | N.TANOVIC | DATE | 08-Nov-2012 |
| CHECKED | M.BATTISTA | DATE | 30-Nov-2012 |
| APPROVED | S.MAKAROV | DATE | 30-Nov-2012 |
| USED ON | | | |
| MATERIAL | SEE PART LIST | | |

GROUP: Technical Division - Design and Drafting | CAGE CODE: 0U5R6

FERMI NATIONAL ACCELERATOR LABORATORY
UNITED STATES DEPARTMENT OF ENERGY

NAME: RF TUNING SOLENOID ASSY

| SCALE | SIZE | DRAWING NUMBER | SHEET | REV |
|---|---|---|---|---|
| 1:4 AS SHOWN | D | F10002277 | 1 OF 1 | - |