REV	DESCRIPTION	DRAWN / APPROVED	DATE / DATE
-	ER #10449 NEW RELEASE		

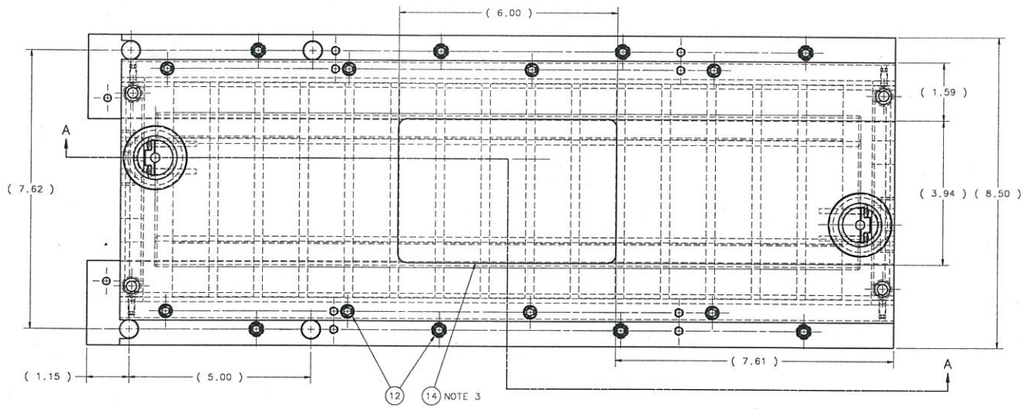

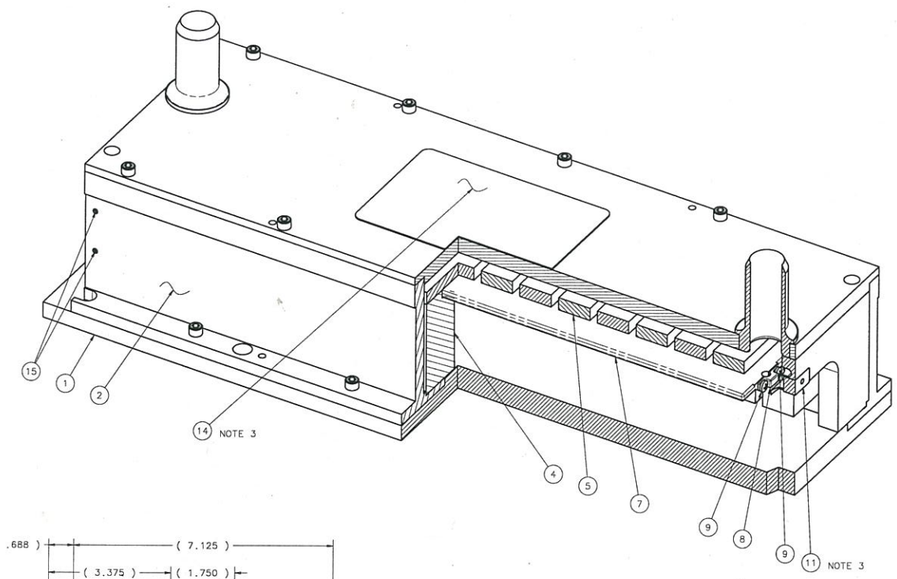

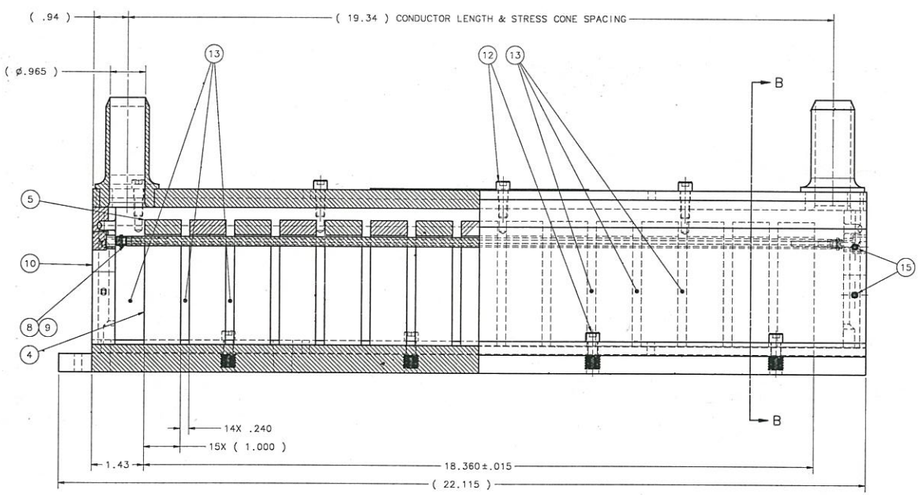

SECTION A-A

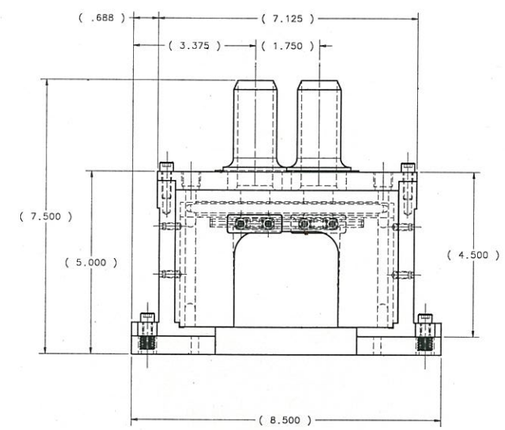

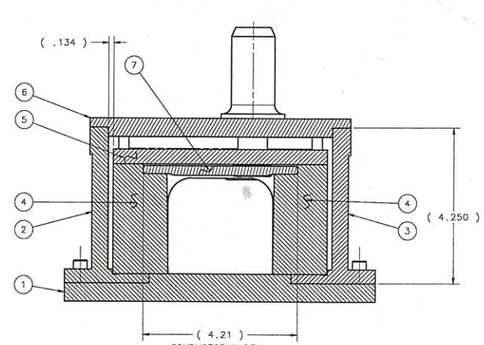

SECTION B-B
SCALE 3:4

NOTES (UNLESS OTHERWISE SPECIFIED):

1. ASSEMBLY MUST BE FREE OF DIRT, GREASE, OIL AND CHIPS.
2. ASSEMBLY TO BE FREE OF ALL SHARP EDGES, CORNERS, AND BURRS.
3. AFFIX TO MAGNET USING LOCTITE 416

OK for Production	
Magnet Series	BKEF
Magnet Numbers	002
Comments	
Approved	Date 6/5/13

ITEM	PART NO.	DESCRIPTION OR SIZE	QTY.
15	MA-482027	SCR.-SOC. SET 10-24 X .50 LG-SS	8
14	MA-318490	MAGNET IDENTIFICATION LABEL	1
13	MA-393482	SILICON RUBBER POTTING COMPOUND	A/R
12	MA-393882	SHCS 1/4-20UNC-2A X 3/4 LG-SS	16
11	MB-481592	END PLATE PLUG	2
10	MD-484461	END PLATE	2
9	MA-481594	PHMS 8-32UNC X .50-SST	4
8	MB-400695	WIRE CLAMP	2
7	MC-481590	CENTER CONDUCTOR	1
6	MC-484458	COVER - WELDMENT - MACHINING	1
5	MB-400692	TOP PIECE - MAGNET (FERRITE)	15
4	MB-400691	SIDE PIECE (FERRITE)	30
3	MC-484457	SIDE PLATE B	1
2	MC-484456	SIDE PLATE A	1
1	MC-484455	BASE PLATE ASSEMBLY	1

PARTS LIST

UNLESS OTHERWISE SPECIFIED					
.XX	.XXX	ANGLES	ORIGINATOR	A.MAKAROV	15-JUN-2012
± - -	± .005	± - -	DRAWN	F.MCCONOLOGUE	15-JUN-2012
			CHECKED	M.KRAMP	19-JUL-2012
			APPROVED	A.MAKAROV	19-JUL-2012

1. BREAK ALL SHARP EDGES - MAX.
2. DO NOT SCALE DRAWING.
3. DIMENSIONS BASED UPON ASME Y14.5M-1994
4. MAX. ALL MACH. SURFACES
5. DRAWING UNITS: INCH

USED ON

MATERIAL: SEE PARTS LIST

FERMI NATIONAL ACCELERATOR LABORATORY
UNITED STATES DEPARTMENT OF ENERGY

BOOSTER FAST KICKER MAGNET
BOOSTER KICKER BKEF
MAGNET ASSEMBLY

SCALE	DRAWING NUMBER	SHEET	REV
3:4	5520.000-ME-484454	1 OF 1	

CREATED WITH : Ideas12NXSeries GROUP: TD/ODCIS-DESIGN-COMPUTING