D	ADDED MARK V, DET. "A"	VLJ	5-1-79	
E	CHANGE POSITION OF ½" HOLES	FJC	8-1-88	

REVISIONS

SYM	DESCRIPTION	DRAWN / APPD.	DATE / DATE	FILMED
A	16 WAS 15 3/4, 8 7/16 WAS 8 3/16, 4.430 WAS 4.187 12 WAS 11 3/4, ADDED: WASHER ½ (12 REQ'D)		9-2-71	
B	PLATE "A" WAS 2920.MB-30013; DIM. "B" WAS 4.430; DIM. "C" WAS 8 7/16; SCREW "D" WAS 8 LG.	RM	15-6-73	
C	ADDED MARK IV	RLS	4-24-74	

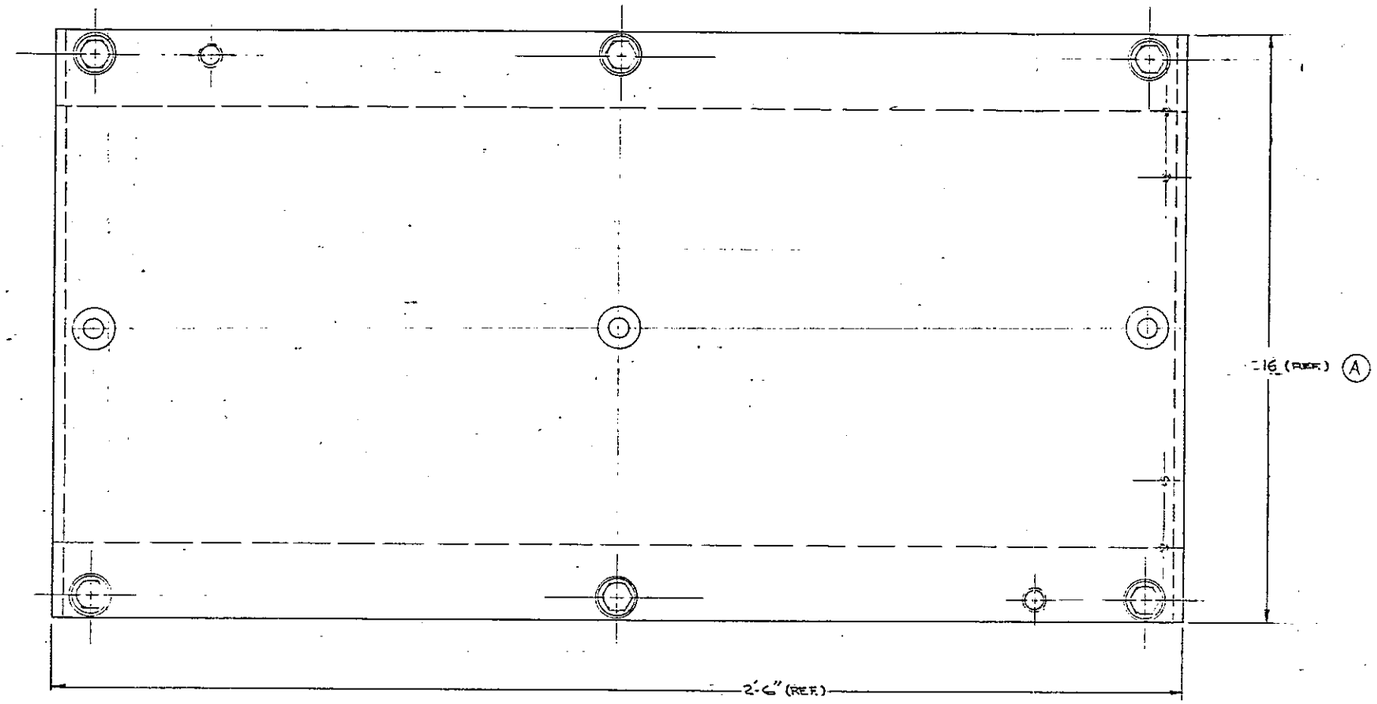

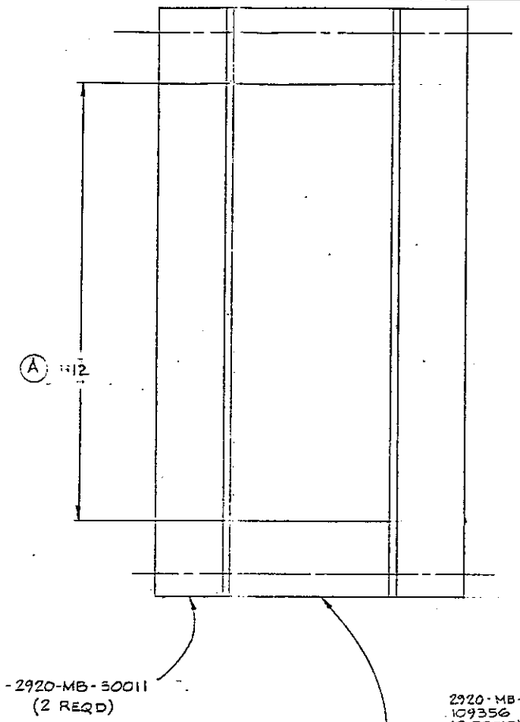

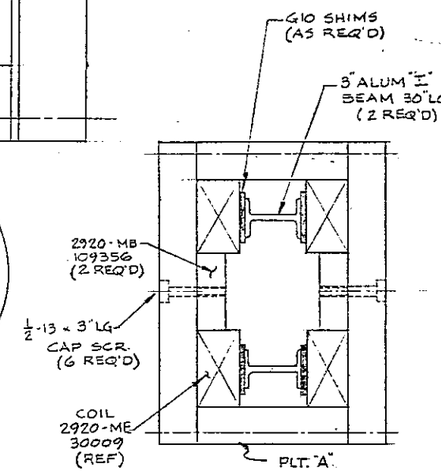

DET "A"
(MARK V ONLY).

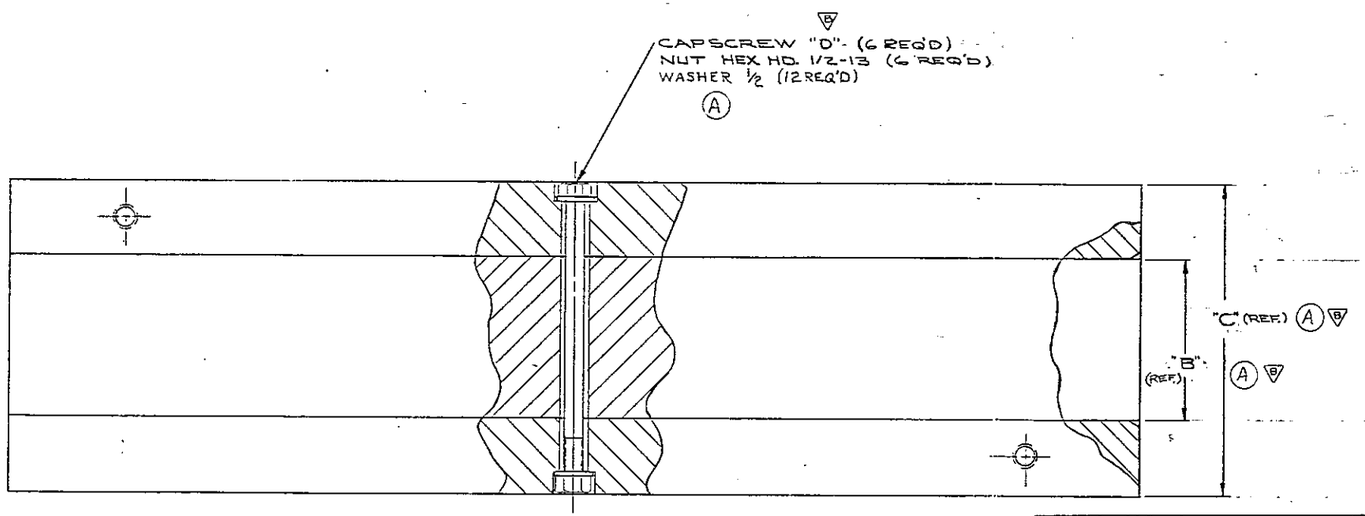

TYPE	PLATE "A"	DIM. "B"	DIM. "C"	CAP SCREW "D"	
MARK I & II	2920.MB-30013	4.400	8 7/16	½-13 8" LG.	
MARK III	2920.MB-30523	4.713	8 3/4	½-13 8½" LG.	
(C) MARK IV	2920-MC-31357	5.000	9"	½-13 8½ LG	
(D) MARK V	2920-MC-109144	5.000	12	½-13 11½ LG	SEE DET "A"

ITEM NO.	PART NO.	DESCRIPTION	QTY. REQ.

PARTS LIST

UNLESS OTHERWISE SPECIFIED			ORIGINATOR		
FRACTIONS	DECIMALS	ANGLES	DRAWN	BREYNE	4-12-71
± 1/64	±	±	CHECKED		
1. BREAK ALL SHARP EDGES 1/64 MAX.			APPROVED	M.C. Ballman	9/13/71
2. DO NOT SCALE DWG.			APPROVED		
3. DIMENSIONING IN ACCORD WITH USASI Y14.5 STD's.			USED ON		
√ MAX. ALL MACHINED SURFACES			MATERIAL-		

NATIONAL ACCELERATOR LABORATORY
U.S. ATOMIC ENERGY COMMISSION

IRON ASSEM.
VERNIER MAGNET

SCALE	FILMED	DRAWING NUMBER	REV.
HALF	FC	2920.MD-30012	E

BRUNING 40.107