REV.	DESCRIPTION	DRAWN	DATE
		APPD.	DATE
	NEW RELEASE-ER #8590		

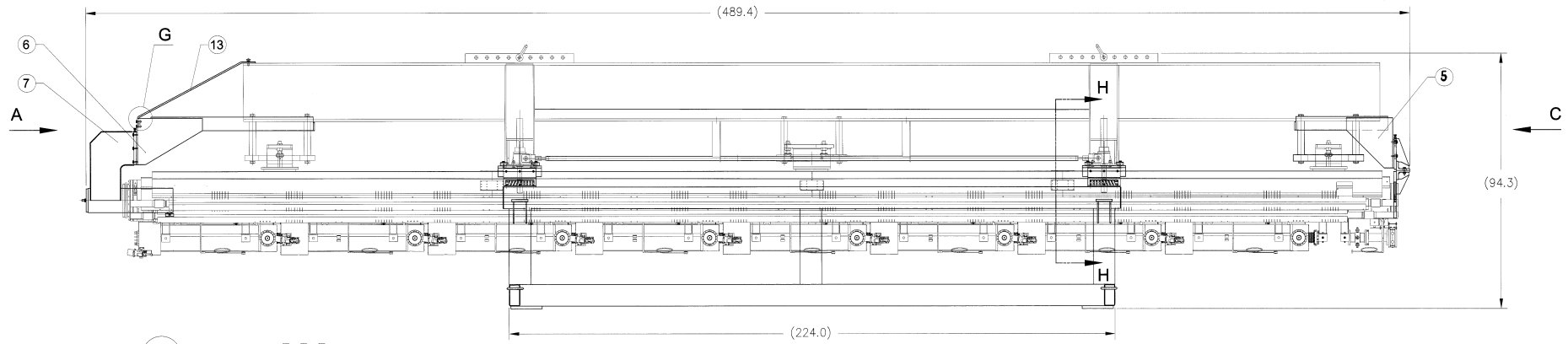

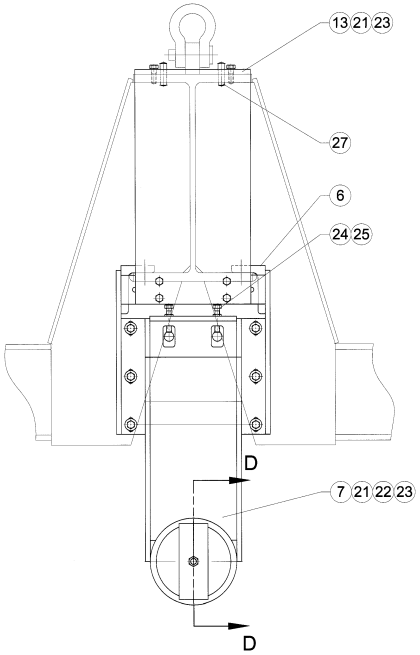

DETAIL B
SCALE 1:5

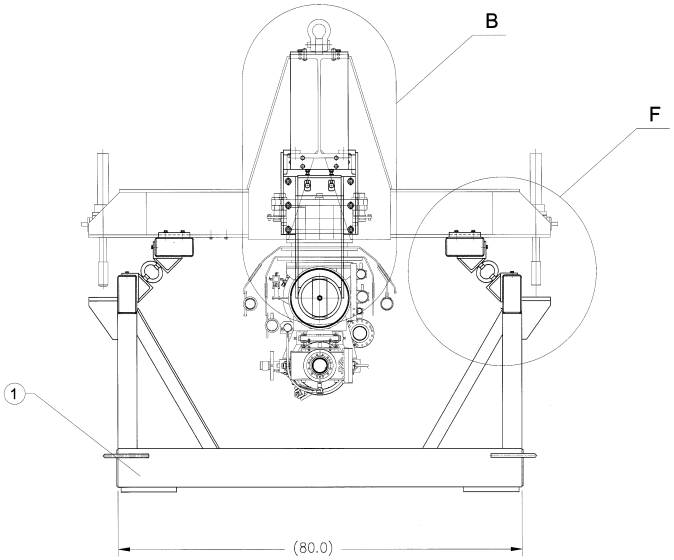

VIEW A
SCALE 1:10

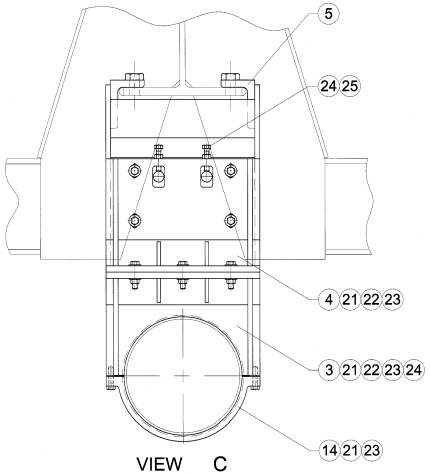

VIEW C
SCALE 1:5

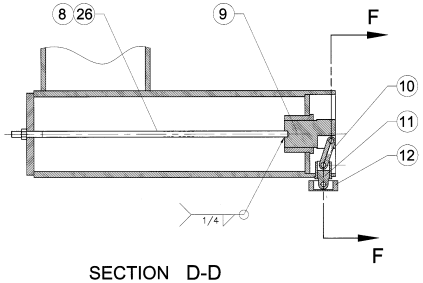

SECTION D-D
SCALE 1:5

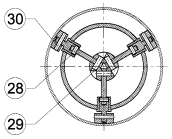

SECTION F-F
SCALE 1:5

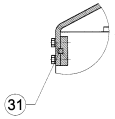

DETAIL G
SCALE 1:5

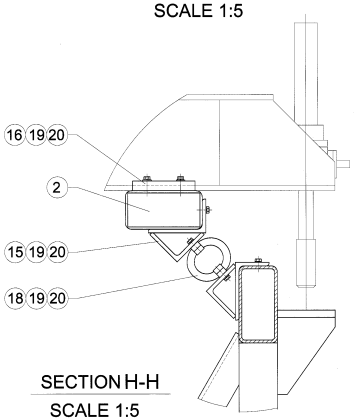

SECTION H-H
SCALE 1:5

ITEM	PART NO.	DESCRIPTION OR SIZE	QTY.
31		KEY BAR 1/2 SQ. x12 ZINK-PL. UNDERSIZED	1
30		DOWEL PIN No 1/2x2.00 ALLOY ST	3
29		DOWEL PIN No 1/2x1.50 ALLOY ST	3
28		DOWEL PIN No 1/2x1.00 ALLOY ST	3
27		TAPER PIN No 10x2.5	2
26		HEX NUT 3/4-10 ZINC-PLATED	1
25		SCREW HEX HD 1/2-13x3.0 5 GR ZINC-PLATED	4
24		HEX NUT 1/2-13 ZINC-PLATED	7
23		SPRING WASHER 1/2 REGULAR ZINC-PLATED	50
22		PLAIN WASHER 1/2 TYPE B WIDE ZINC-PLATED	50
21		SCREW HEX HD 1/2-13x2.0 5 GR ZINC-PLATED	50
20		SPRING WASHER 3/8 REGULAR ZINC-PLATED	40
19		SCREW HEX HD 3/8-16x1.50 5 GR ZINC-PLATED	40
18		SHOCK ISOLATOR M20-430-06-S-A	4
17			
16	MB-443502	CLAMP PLATE	8
15	MC-443501	ISOLATOR BRACKET WELDMENT	8
14	MB-443401	GR TUBE CLAMP	1
13	MB-443400	EXTENSION SUPPORT PLATE	1
12	MB-443399	PAD	3
11	MB-443398	ROD	3
10	MB-443397	LINK	3
9	MB-443396	CENTRAL BLOCK	1
8	MB-443395	ROD	1
7	MD-443387	GR TUBE SUPPORT WELDMENT	1
6	MD-443385	GIRDER EXTENSION WELDMENT 2	1
5	MC-443384	GIRDER EXTENSION WELDMENT 1	1
4	MC-443382	BRACKET WELDMENT	1
3	MC-443379	GR TUBE CLAMP WEDMENT	1
2	MB-443378	ISOLATOR SPACER WELDMENT	4
1	ME-443377	BASE FRAME WELDMENT	1

PARTS LIST

UNLESS OTHERWISE SPECIFIED			ORIGINATOR		
.XX	.XXX	ANGLES	DRAWN	E.BORISSOV	8/13/07
±.02	±.01	±1°	CHECKED	E.BORISSOV	
1. BREAK ALL SHARP EDGES .02" MAX.			APPROVED	T.ARKAN	8/15/07
2. DO NOT SCALE DRAWING			USED ON:		
3. DIMENSIONS BASED UPON ANSI Y14.5M-1982					
4. MAX. ALL MACH. SURFACES 125			MATERIAL:		

FERMI NATIONAL ACCELERATOR LABORATORY
UNITED STATES DEPARTMENT OF ENERGY

SRF CRYOMODULE ASSEMBLY FACILITY
COLD MASS TRANSPORT FIXTURE
ASSEMBLY

SCALE	FILMED	DRAWING NUMBER	REV.
1:15		5525-ME-443376	

CREATED WITH AUTOCAD