REV	DESCRIPTION	DRAWN / APPROVED	DATE / DATE
–	ER 10469 NEW RELEASE		

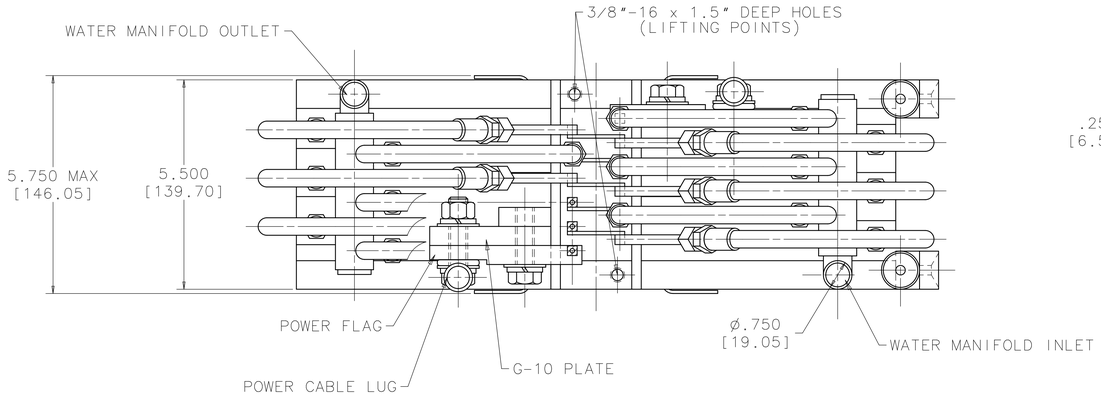

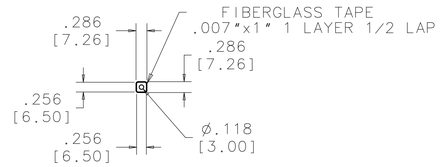

SOLENOID INCLUDES 6 PANCAKE COILS 17 x 2 = 34 TURNS
(CONNECTED IN SERIES ELECTRICALLY AND IN PARALLEL ON WATER)

SOLENOID PEAK FIELD - 0.587 T
CURRENT - 272 A
VOLTAGE - 23.2 V
CONDUCTOR: 6.5 mm x 6.5 mm x ø3 mm HOLE
COPPER CROSS SECTION - 34.3 sq.mm
HOLE CROSS SECTION - 7 sq.mm
LENGTH OF TURN (AVERAGE) - 28"
COIL LENGTH (EACH) = 28" x 34 = 952" = 79.3 FT = 24.2 m
COIL RESISTANCE (EACH COIL) - 0.0138 Ohms
TOTAL SOLENOID RESISTANCE - .083 Ohms
POWER LOSS (EACH COIL) - 1.05 kW
TOTAL POWER LOSS -6.3 kW
WATER VELOCITY IN THE CONDUCTOR AT 60 PSI PRESSURE DROP - 1.18 m/s
WATER FLOW (EACH COIL) - 0.0083 l/s = 0.132 GPM
WATER FLOW TOTAL - .80 GPM
WATER TEMPERATURE RISE (AT 60 PSI PRESSURE DROP) - 30°C
SOLENOID SHALL BE VACUUM IMPREGNATED WITH EPOXY.

DIPOLE PACKAGE INCLUDES VERTICAL AND HORIZONTAL DIPOLES.

EACH DIPOLE ASSEMBLED FROM 2 SHELL-TYPE COILS WOUND FROM #12 SQUARE HEAVY ML COATED COPPER MAGNET WIRE.
VERTICAL DIPOLE COILS (INNER LAYER) HAVE 21 TURNS (EACH),
HORIZONTAL DIPOLE COILS (OUTER LAYER) - 24 TURNS (EACH).
1/8" THICK SPACER BETWEEN COILS PROVIDES SPACE FOR THE LEADS.

THE LEADS OF VERTICAL AND HORIZONTAL DIPOLES SHALL BE CONNECTED TO TERMINAL BLOCKS INSTALLED ON OPPOSITE SIDES OF SOLENOID, AS SHOWN.

DIPOLE PACKAGE MUST BE INSTALLED INTO SOLENOID WITH A GOOD THERMAL CODUCTIVITY (SOLENOID WATER WILL HELP TO DISSIPATE THE DIPOLE POWER LOSSES).

TOTAL SOLENOID WEIGHT ~ 135 KG (300 LBS).

THIS DRAWING FOR CONCEPTUAL PURPOSES ONLY, NOT FOR FABRICATION.

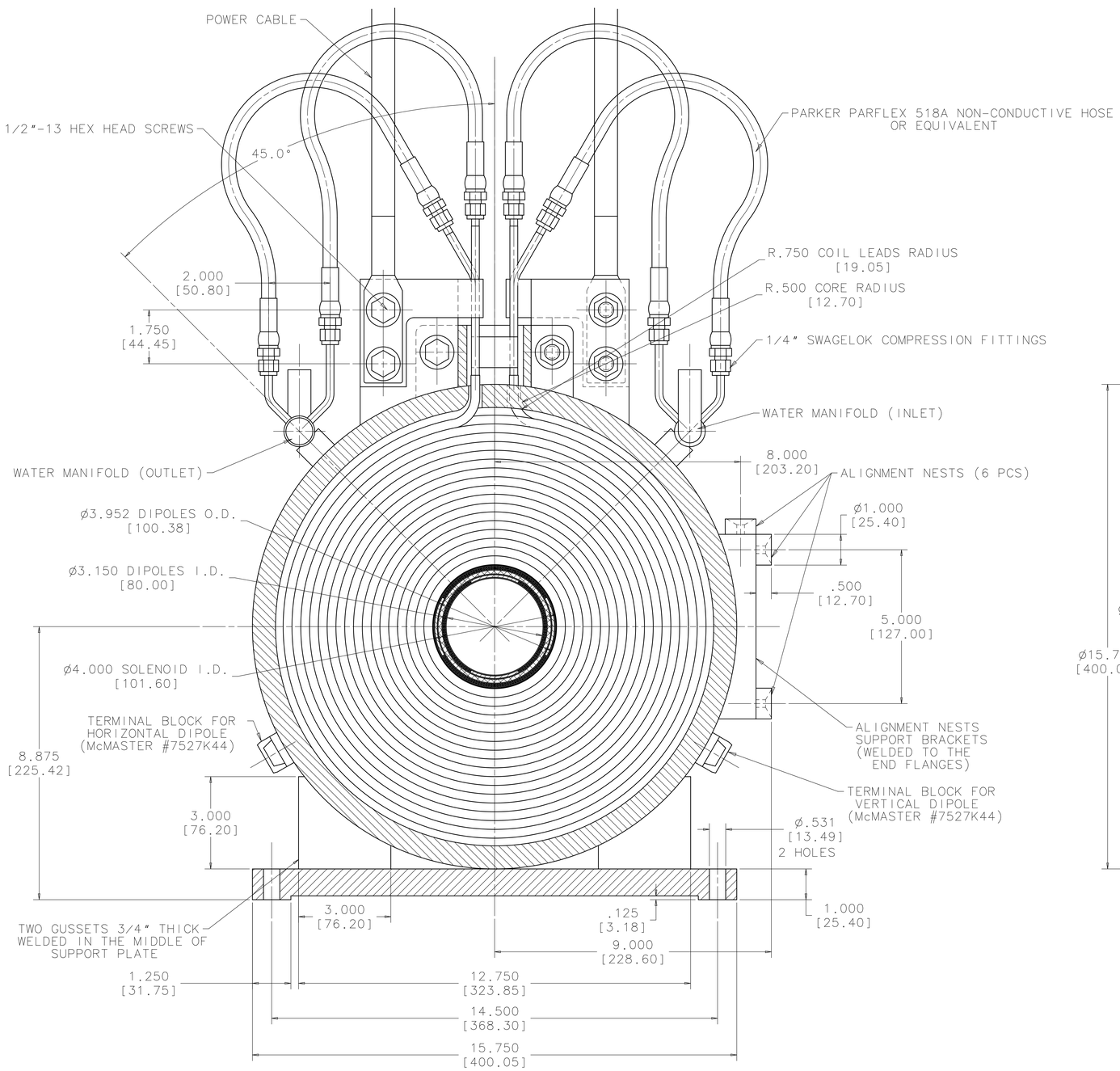

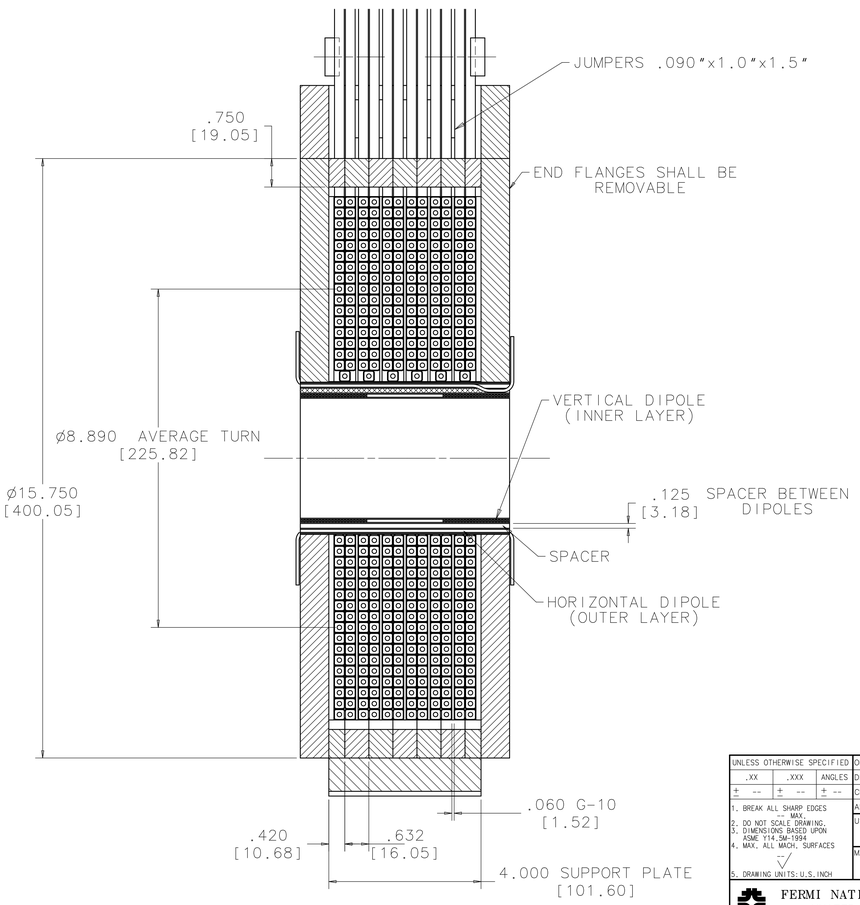

UNLESS OTHERWISE SPECIFIED			ORIGINATOR	A.MAKAROV	06-JUL-2012
.XX	.XXX	ANGLES	DRAWN	A.MAKAROV	06-JUL-2012
± --	± --	± --	CHECKED	M.KRAMP	07-09-2012
1. BREAK ALL SHARP EDGES .--- MAX.			APPROVED	A.MAKAROV	07-09-2012
2. DO NOT SCALE DRAWING. 3. DIMENSIONS BASED UPON ASME Y14.5M-1994 4. MAX. ALL MACH. SURFACES			USED ON		
5. DRAWING UNITS: U.S. INCH			MATERIAL AS NOTED		

FERMI NATIONAL ACCELERATOR LABORATORY
UNITED STATES DEPARTMENT OF ENERGY

PROJECT X
ROOM TEMP SOLENOID
PXIE SOLENOID

SCALE	DRAWING NUMBER	SHEET	REV
	5520.000-ME-484505	1 OF 1	

CREATED WITH : Ideas12NXSeries GROUP: TD/DDCIS-DESIGN-COMPUTING