DESCRIPTION: COIL PACK ASSEMBLY, M1
CATEGORY: COIL PROJECT: APSMagnets

REV	REVISION CONTROL DOCUMENT	DATES	SIGNATURES
-	F10020608---RCD		DRAWN
			APPROVED

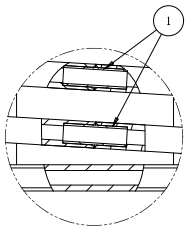

DETAIL G
SCALE 1:1

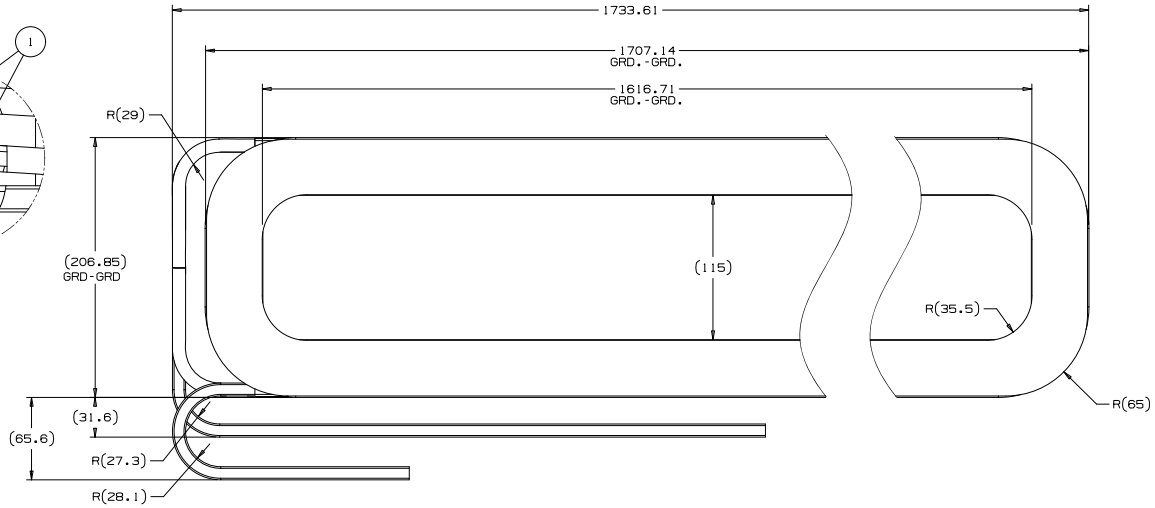

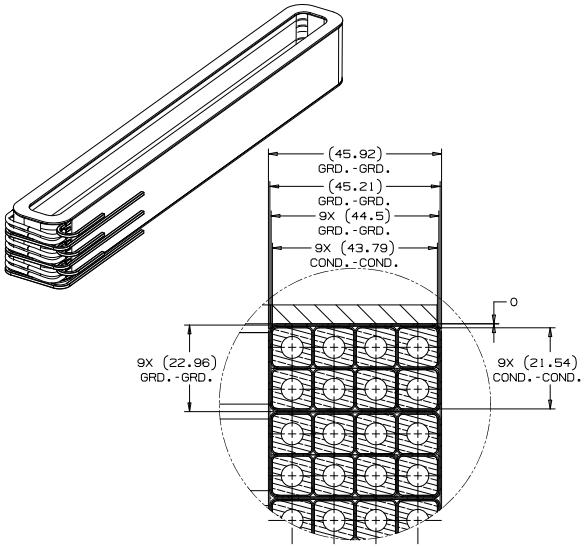

DETAIL D
SCALE 3:2

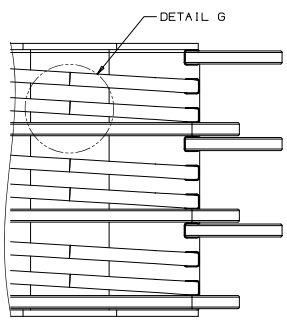

VIEW E-E

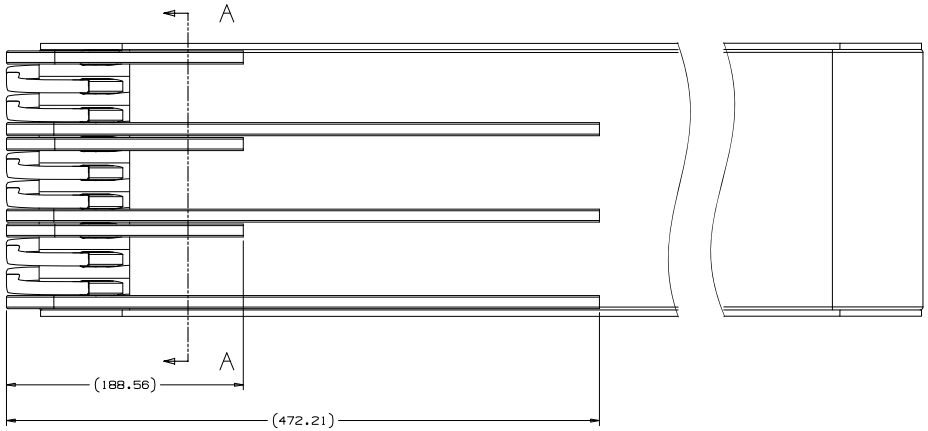

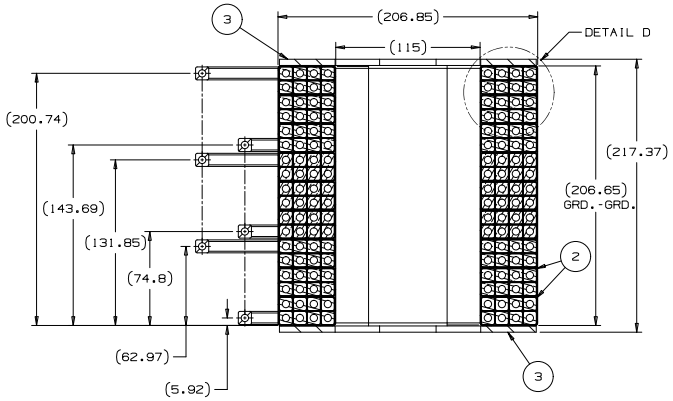

SECTION A-A

NOTES (UNLESS OTHERWISE SPECIFIED):

1. ASSEMBLE 9 COILS PER DRAWING F10020583.
2. CLAMP PANCAKE COILS AS NEEDED, AND WRAP THE COIL WITH ONE LAYER OF FIBERGLASS TAPE (ITEM 4), HALF LAPPED.
3. PLACE COIL ASSEMBLY INTO POTTING FIXTURE, F10023693, PROTECT TUBE AND LEAD ENDS FROM EPOXY.
4. VACUUM IMPREGNATE COIL ASSEMBLY WITH HEAT CURE EPOXY MIX (ITEM 5), AND CURE AT 250° FOR 12 HOURS.
5. ELECTRIC TEST:
   HIPOT, SECTION TO SECTION, 500V
   CURRENT LEAKAGE SHOULD NOT EXCEED 5 μA
   MEASURE COIL RESISTANCE
   L_{100}, L_{1000}
   Q_{100}, Q_{1000}
6. WATER TEST
   PRESSURE 300 PSI 15 MINUTES, NO VISIBLE LEAKS
   FLOW AT 60PSI AND 100PSI

ITEM	PART NUMBER	DESCRIPTION	QTY
5	FC0028179	HEAT CURE EPOXY MIX	A/R
4	FC0045055	TAPE, 1"X.007 THK, FIBERGLASS	A/R
3	F10023695	SPACER, M1 COIL POTTING	2
2	F10020583	PANCAKE COIL ASSY. M1	9
1	F10014970	SLEEVE-BRAZING	6

PARTS LIST

UNLESS OTHERWISE SPECIFIED				
±X	±X.X	±X.XX	±X/X	±X°
2	0.3	0.12	N/A	1°

BREAK ALL SHARP EDGES 0.5 MAX.
DO NOT SCALE DRAWING
DIMENSIONS BASED ON ASME Y14.5M-2009
MAX. ALL MACH SURFACES 3.2
DRAWING UNITS: MM

DRAWN	J.KURNAT	DATE	07-May-2014
CHECKED	M.KRAMP	DATE	05-Aug-2014
APPROVED	S.MAKAROV	DATE	05-Aug-2014
USED ON	F10020490		
MATERIAL	SEE PARTS LIST		
GROUP: Technical Division - Design and Drafting		CAGE CODE: 0U5R6	

FERMI NATIONAL ACCELERATOR LABORATORY
UNITED STATES DEPARTMENT OF ENERGY

NAME: COIL PACK ASSEMBLY, M1

SCALE	SIZE	DRAWING NUMBER	SHEET	REV
1:2	A1	F10020608	1 OF 1	-