DESCRIPTION: ASSEMBLY, 1.3GHZ CAVITY LCLS-II
CATEGORY: ASSEMBLY - PROJECT: LCLSIICryomodule

REV	REVISION CONTROL DOCUMENT	DATES		SIGNATURES
A	F10008819-A-RCD	14-Aug-2015	DRAWN	G. LANGLOIS
		18-Aug-2015	APPROVED	C. GRIMM

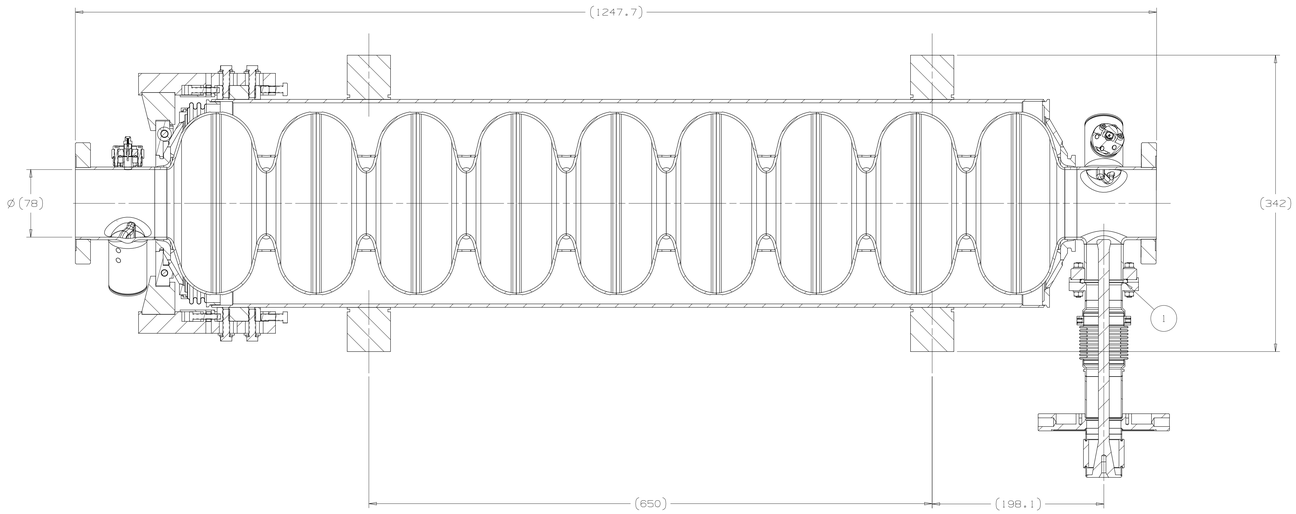

SECTION C-C

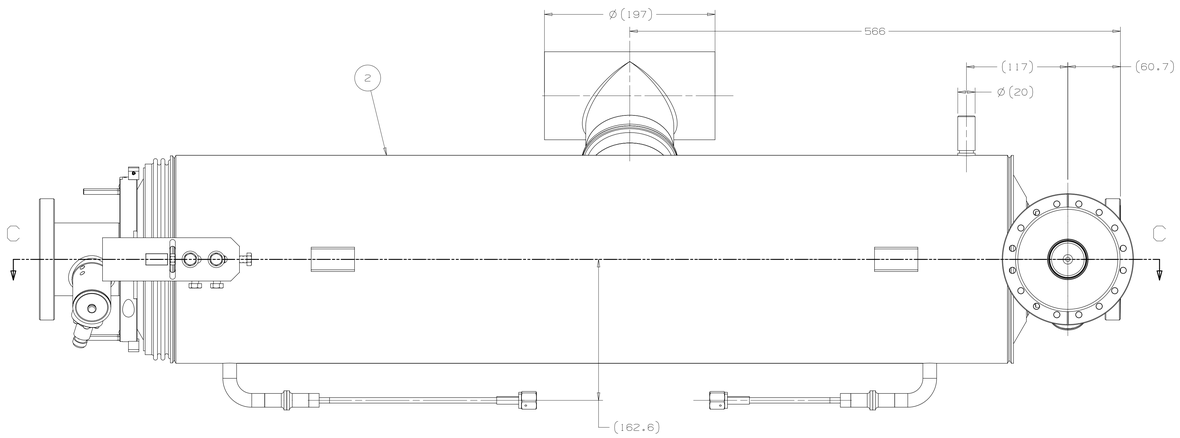

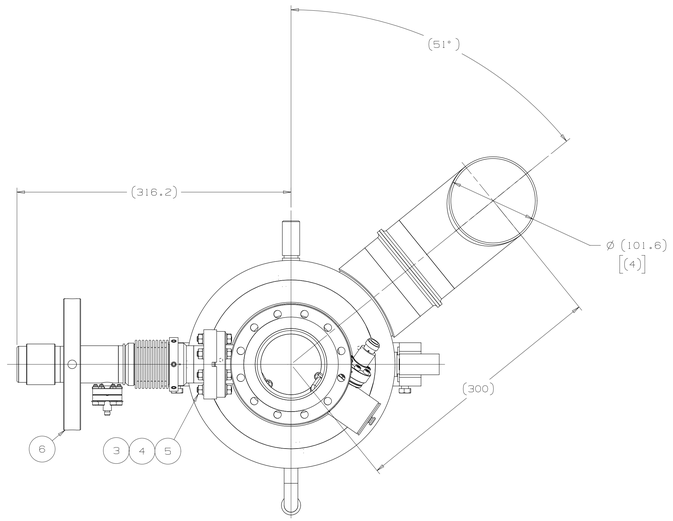

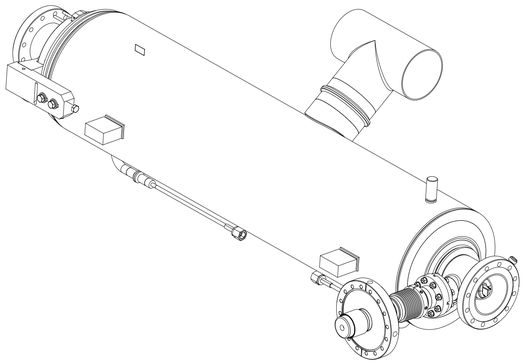

ITEM	PART#	DESCRIPTION	QTY.
6	FC0053238	ASSEMBLY MC COLD SLAC	1
5	FC0046538	STUD, THREADED - M6 X 40 MM LONG 316L RT, EP	8
4	FC0041391	NUT HEX M6X1X5, SB	17
3	FC0016263	WASHER,M6-6.4x12x1.4,SS316L	17
2	F10027807	ASSEMBLY, LCLS-II PRE-PRODUCTION CAVITY	1
1	FC0439231	SCRF SEAL FOR NW40 FLANGE	1

PARTS LIST

NOTES (UNLESS OTHERWISE SPECIFIED):

1. ASSEMBLY TO BE FREE OF DIRT, GREASE, OIL, AND CHIPS.
2. LEAK CHECK. NO LEAK SHALL BE DETECTABLE ON THE MOST SENSITIVE SCALE OF A HELIUM LEAK DETECTOR WITH A MINIMUM SENSITIVITY (MDL) OF 2 x 10⁻⁸ MBAR x LITER / SEC. THE VACUUM LEVEL DURING THE LEAK CHECK SHALL BE LESS THAN 1 X 10⁻⁶ TORR.
3. ASSEMBLY WILL BE OPERATE IN ULTRA-HIGHT VACUUM UNDER CRIOGENIC CONDITION.
4. ITEM #6 - SLAC RESPONSIBILITY.

UNLESS OTHERWISE SPECIFIED				
±X	±X.X	±X.XX	±X/X	±X°
2	0.3	0.12	N/A	1°

BREAK ALL SHARP EDGES 0.5 MAX.
DO NOT SCALE DRAWING
DIMENSIONS BASED ON ASME Y14.5M-2009
MAX. ALL MACH SURFACES 3.2
DRAWING UNITS: MM

DRAWN	G. LANGLOIS	DATE	02-Sep-2014
CHECKED	M. KRAMP	DATE	03-Sep-2014
APPROVED	Y. ORLOV	DATE	03-Sep-2014
USED ON	F10009887		
MATERIAL	SEE PARTS LIST		

GROUP: Technical Division - Design and Drafting | CAGE CODE: DUSR6

FERMI NATIONAL ACCELERATOR LABORATORY
UNITED STATES DEPARTMENT OF ENERGY

NAME: ASSEMBLY, 1.3GHZ CAVITY LCLS-II

SCALE	SIZE	DRAWING NUMBER	SHEET	REV
0.4:1 AS SHOWN	A0	F10008819	1 of 1	A