DESCRIPTION: LCLS-II PRODUCTION CAVITY ASSEMBLY
CATEGORY: ASSEMBLY PROJECT: LCLSIICryogenicSystem

REV	REVISION CONTROL DOCUMENT	DATES	SIGNATURES	
E	F10023864-E-RCD	23-Aug-2016	DRAWN	B.DAMPHOUSSE
		30-Aug-2016	APPROVED	C.GRIMM

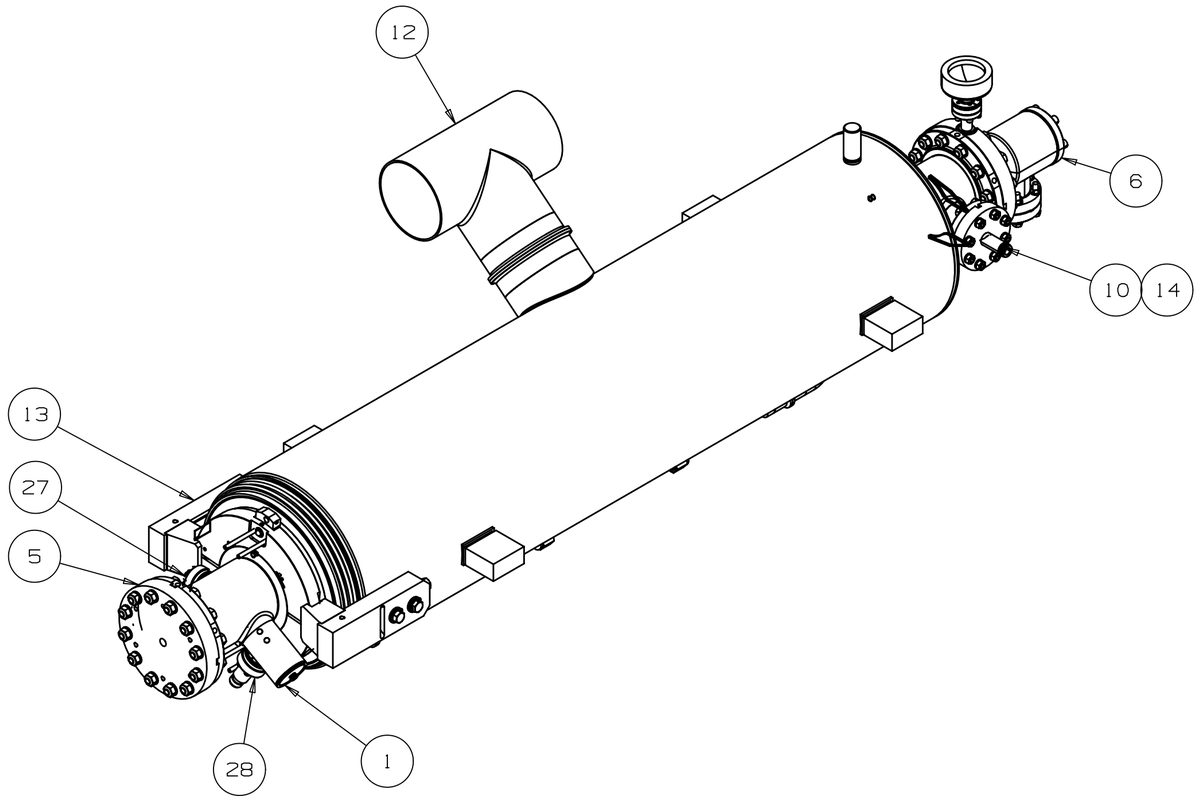

ITEM	PART#	DESCRIPTION	QTY.
32	FC0046539	STUD, THREADED - M8 X 50 MM LONG 316L RT, EP (REF FERMI DWG MA-393926)	24
31	FC0046538	STUD, THREADED - M6 X 40 MM LONG, 316L RT, EP (REF FERMI DWG MA-393927)	8
30	FC0019006	GASKET, COPPER - 2.75" FLANGE (REF FERMI DWG MA-393931)	1
29	FC0016394	FLANGE-CF, 2.75xBLANK,NR,C,SS316L	1
28	FC0051669	HOM FEEDTHRU - KYOCERA #GMM-B4786A	2
27	FC0053618	PICKUP, FIELD - KYOCERA #GMM-B4787	1
26			
25			
24	FC0041939	SHCS, M4 X 0.7 X 20 LG X FT, SS 316L, ROLLED, EP	18
23	FC0041393	NUT_HEX, M8 X 1.25 X 6.5, SB	48
22	FC0041391	NUT_HEX, M6 X 1 X 5, SB	22
21	FC0059650	WASHER, 5/16, SPLIT LOCK, SS316L	4
20	F10028993	WASHER M8-6.4 - SS316L ELECTRO-POLISHED	48
19	F10028985	WASHER M6-6.4 - SS316L ELECTRO-POLISHED	16
18	FC0016263	WASHER,M6-6.4x12x1.4,SS316L	12
17	FC0042074	WASHER,5/16-0.343x0.687x0.08,SS316L	4
16	FC0010532	HHCS, 5/16-18 x 1 LG x FT, SB	4
15	FC0009374	HHCS,M6x1x40LGxFT,SS316L	6
14	F10057230	HIGH "Q" FIXED ANTENNA TIP	1
13	F10017508	ASSEMBLY, BELLOWS BRACE - LCLS-II PROTOTYPE	1
12	F10015802	WELDMENT, HELIUM VESSEL	1
11	F10010529	BELLOW	1
10	FC0058777	HIGH "Q" FIXED ANTENNA FEED THRU - SST INC.#FA33407CA	1
9	F00459459	FNAL CAVITY TRANS RING PROBE END	1
8	F00459457	FNAL CAVITY TRANS RING MC END	1
7	F00459093	NUT BACKING PLATE	6
6	F10047915	BLANK-OFF FLANGE AND VALVE ASSEMBLY 316L SS	1
5	F00457202	FLANGE BLANK OFF CAVITY END	1
4	F00439233	SCRF SEAL FOR MW8 FLANGE	3
3	F10026202	SEAL END FLANGE 1.3	2
2	F00439231	SCRF SEAL FOR NW40 FLANGE	1
1	F00439181	1-300 GHZ DESY RF CAVITY ASSY	1

PARTS LIST

NOTES (UNLESS OTHERWISE SPECIFIED):

1. ASSEMBLY MUST BE FREE FROM DUST, GREASE, OIL, CHIPS, AND BURRS.
2. PLEASE REFER TO J-LAB TECHNICAL SPECIFICATION LCLS-II-A.6-TS-0092 FOR ASSEMBLY, SHIPPING, AND HANDLING INSTRUCTIONS.
3. FINAL RING DIAMETER DUE TO POST WELDING SHRINKAGE.
   ITEM #8 TO BE MACHINED PER DRAWING SPEC. PRIOR TO WELDING.
   ALTERNATE METHOD: ROUGH MACHINE ITEM #8 AND FINISH
   PER DIMENSION SHOWN ON THIS DRAWING.

UNLESS OTHERWISE SPECIFIED

±X	±X.X	±X.XX	±X/X	±X°
2	0.3	0.12	N/A	1°

BREAK ALL SHARP EDGES .015 MAX.
DO NOT SCALE DRAWING
DIMENSIONS BASED ON ASME Y14.5M-1994
MAX. ALL MACH SURFACES 3.2
DRAWING UNITS: MM

DRAWN	M.SAWTELL	DATE	01-Jul-2014
CHECKED	M.KRAMP	DATE	15-Jul-2014
APPROVED	C.GRIMM	DATE	16-Jul-2014

USED ON

MATERIAL
SEE PARTS LIST

GROUP: Technical Division - Design and Drafting | CAGE CODE: 0U5R6

FERMI NATIONAL ACCELERATOR LABORATORY
UNITED STATES DEPARTMENT OF ENERGY

NAME
ASSEMBLY, LCLS-II PRODUCTION CAVITY

SCALE	SIZE	DRAWING NUMBER	SHEET	REV
1:5 AS SHOWN	A2	F10023864	1 OF 3	E

DESCRIPTION: LCLS-II PRODUCTION CAVITY ASSEMBLY
CATEGORY: ASSEMBLY PROJECT: LCLSIICryogenicSystem

REV	REVISION CONTROL DOCUMENT	DATES		SIGNATURES
E	F10023864-E-RCD	23-Aug-2016	DRAWN	B.DAMPHOUSSE
		30-Aug-2016	APPROVED	C.GRIMM

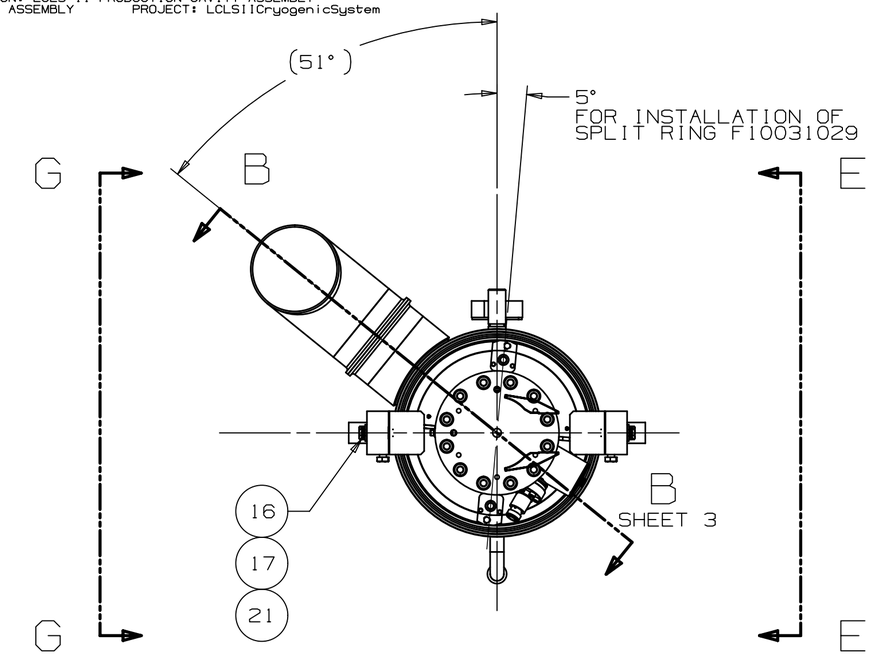

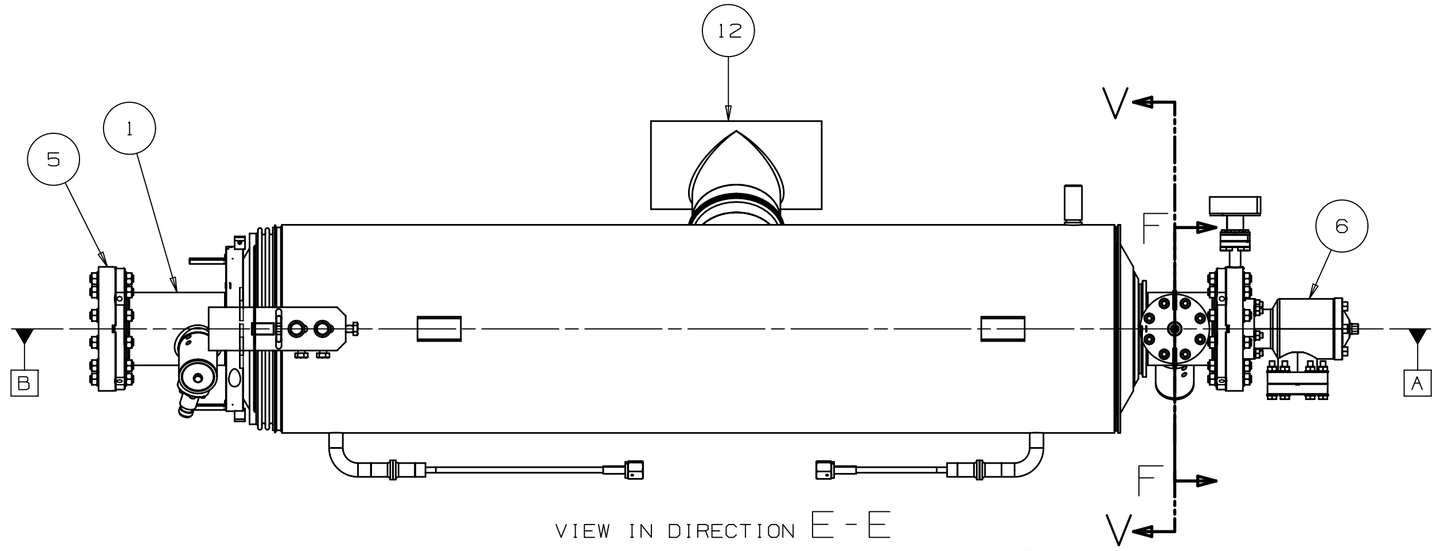

VIEW IN DIRECTION E-E

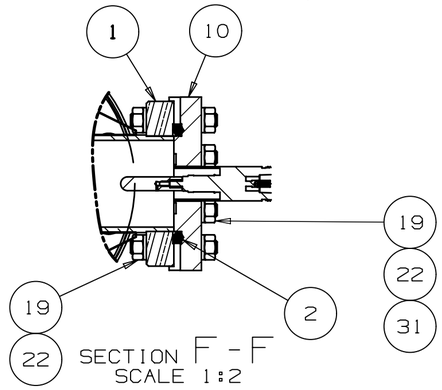

SECTION F-F
SCALE 1:2

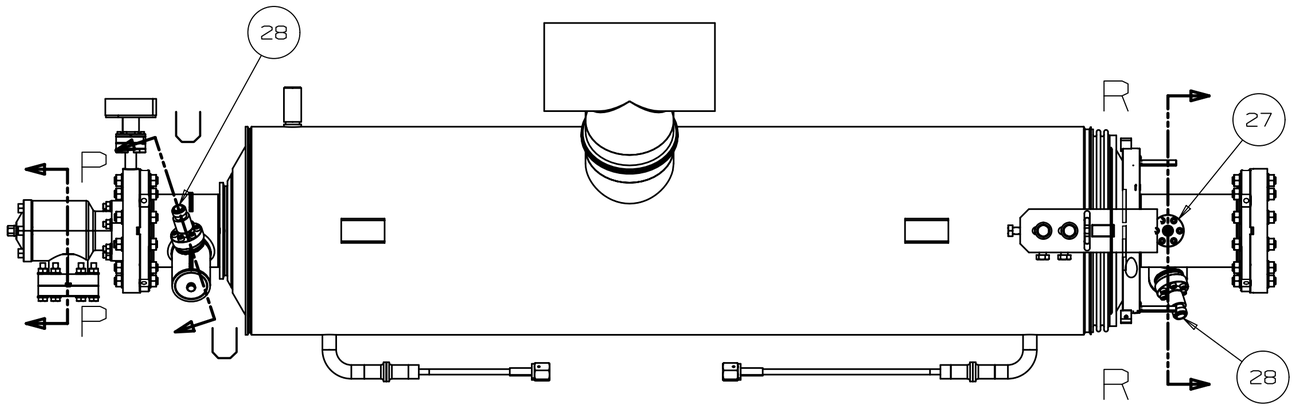

VIEW IN DIRECTION G-G

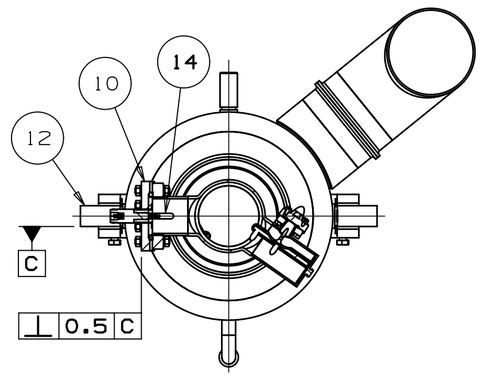

SECTION V-V
SCALE 1:5

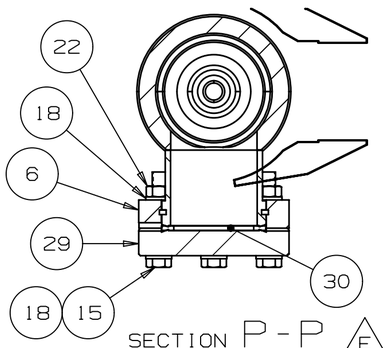

SECTION P-P
SCALE 1:2
E

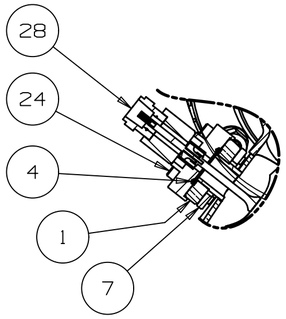

SECTION U-U
SCALE 1:2
2 PLACES

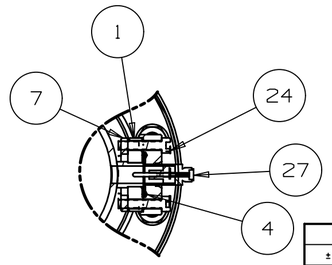

SECTION R-R
SCALE 1:2

UNLESS OTHERWISE SPECIFIED				
±X	±X.X	±X.XX	±X/X	±X°
2	0.3	0.12	N/A	1°

BREAK ALL SHARP EDGES .015 MAX.
DO NOT SCALE DRAWING
DIMENSIONS BASED ON ASME Y14.5M-1994
MAX. ALL MACH SURFACES 3.2
DRAWING UNITS: MM

DRAWN	M.SAWTELL	DATE	01-Jul-2014
CHECKED	M.KRAMP	DATE	15-Jul-2014
APPROVED	C.GRIMM	DATE	16-Jul-2014

USED ON

MATERIAL
SEE PARTS LIST
GROUP: Technical Division - Design and Drafting CAGE CODE: 0U5R6

FERMI NATIONAL ACCELERATOR LABORATORY
UNITED STATES DEPARTMENT OF ENERGY

NAME
ASSEMBLY, LCLS-II PRODUCTION CAVITY

SCALE	SIZE	DRAWING NUMBER	SHEET	REV
1:5 AS SHOWN	A2	F10023864	2 OF 3	E

DESCRIPTION: LCLS-II PRODUCTION CAVITY ASSEMBLY
CATEGORY: ASSEMBLY PROJECT: LCLSIICryogenicSystem

REV	REVISION CONTROL DOCUMENT	DATES		SIGNATURES
E	F10023864-E-RCD	23-Aug-2016	DRAWN	B.DAMPHOUSSE
		30-Aug-2016	APPROVED	C.GRIMM

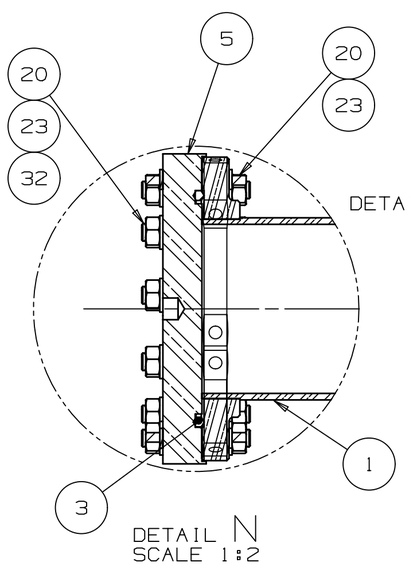

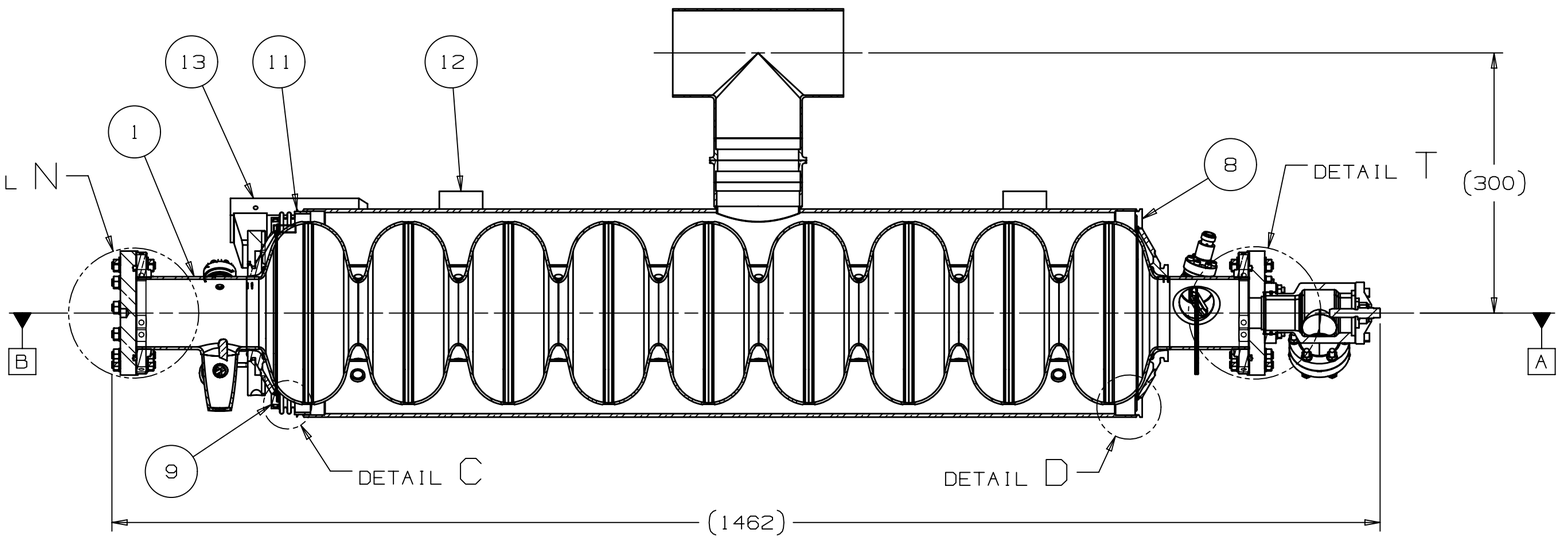

SECTION B - B

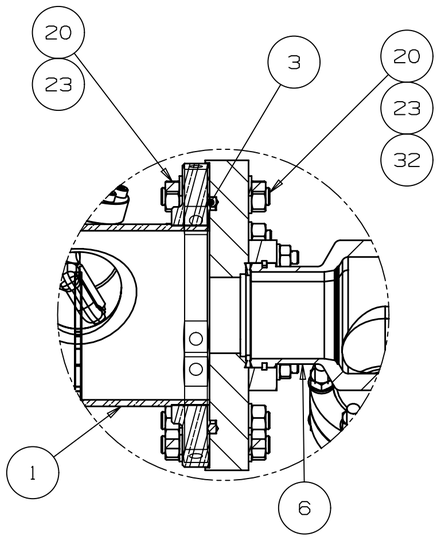

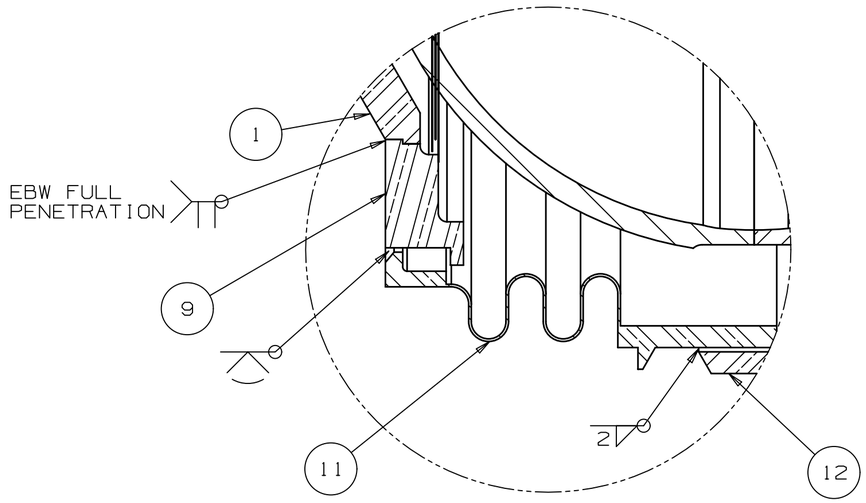

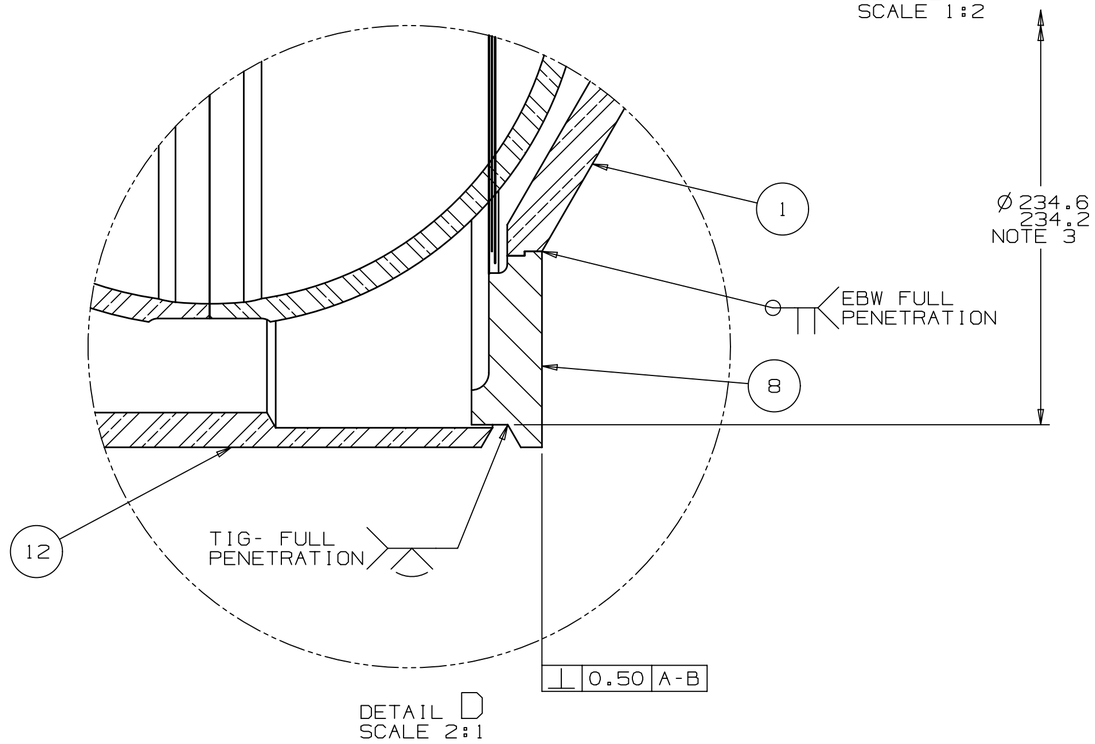

UNLESS OTHERWISE SPECIFIED				
±X	±X.X	±X.XX	±X/X	±X°
2	0.3	0.12	N/A	1°

BREAK ALL SHARP EDGES .015 MAX.
DO NOT SCALE DRAWING
DIMENSIONS BASED ON ASME Y14.5M-1994
MAX. ALL MACH SURFACES 3.2
DRAWING UNITS: MM

DRAWN	M.SAWTELL	DATE	01-Jul-2014
CHECKED	M.KRAMP	DATE	15-Jul-2014
APPROVED	C.GRIMM	DATE	16-Jul-2014

USED ON

MATERIAL
SEE PARTS LIST

GROUP: Technical Division - Design and Drafting | CAGE CODE: 0U5R6

FERMI NATIONAL ACCELERATOR LABORATORY
UNITED STATES DEPARTMENT OF ENERGY

NAME
ASSEMBLY, LCLS-II PRODUCTION CAVITY

SCALE	SIZE	DRAWING NUMBER	SHEET	REV
1:5 AS SHOWN	A2	F10023864	3 OF 3	E