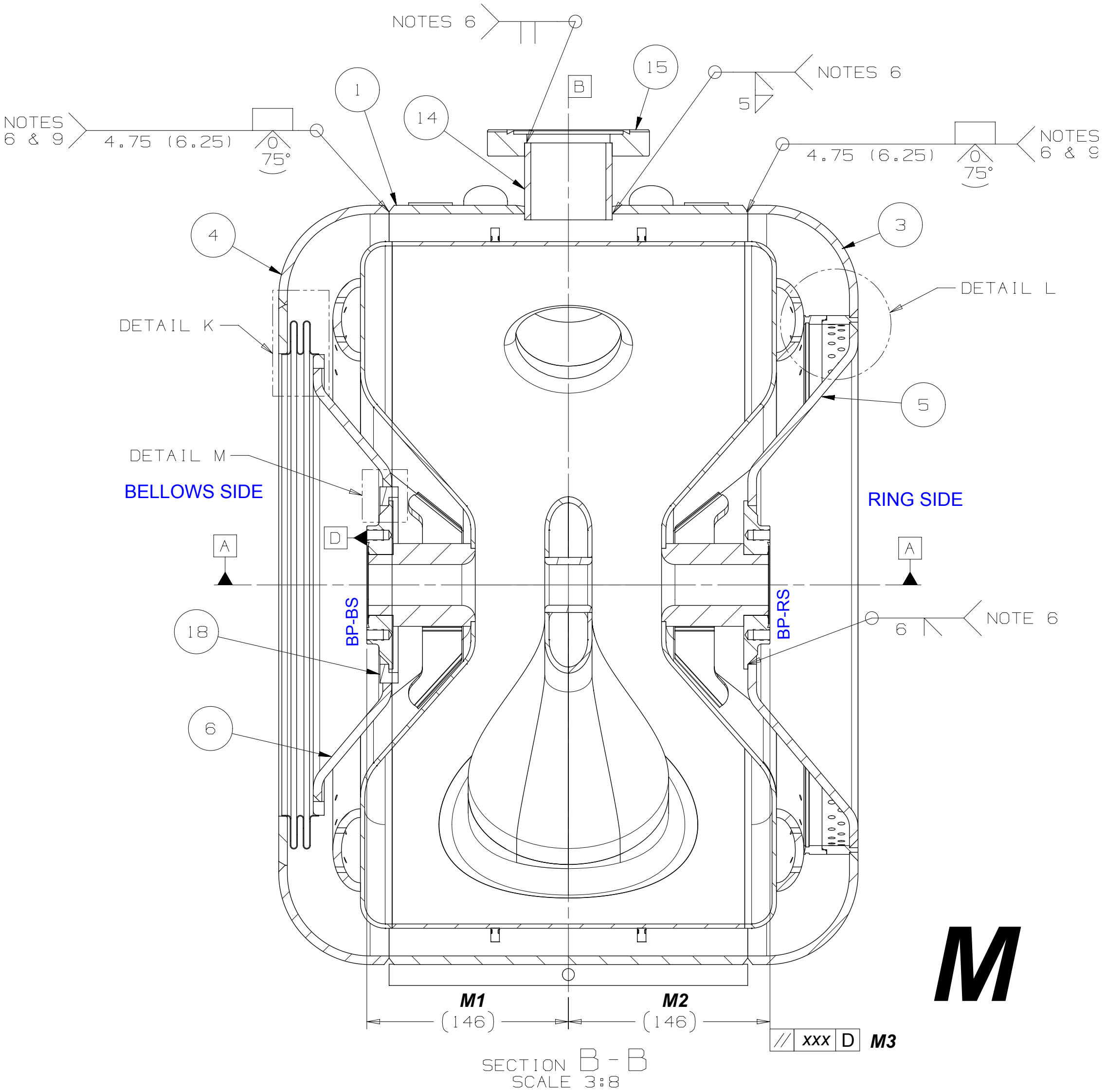
NOTES 6
15
NOTES 6
5
B
1
14
NOTES 6 & 9
4.75 (6.25)
0
75°
4.75 (6.25)
0
75°
NOTES 6 & 9
4
3
DETAIL L
DETAIL K
5
DETAIL M
BELLOWS SIDE
RING SIDE
D
A
A
BP-BS
BP-RS
18
6
NOTE 6
6
M1
(146)
M2
(146)
// xxx D M3
SECTION B - B
SCALE 3:8
M