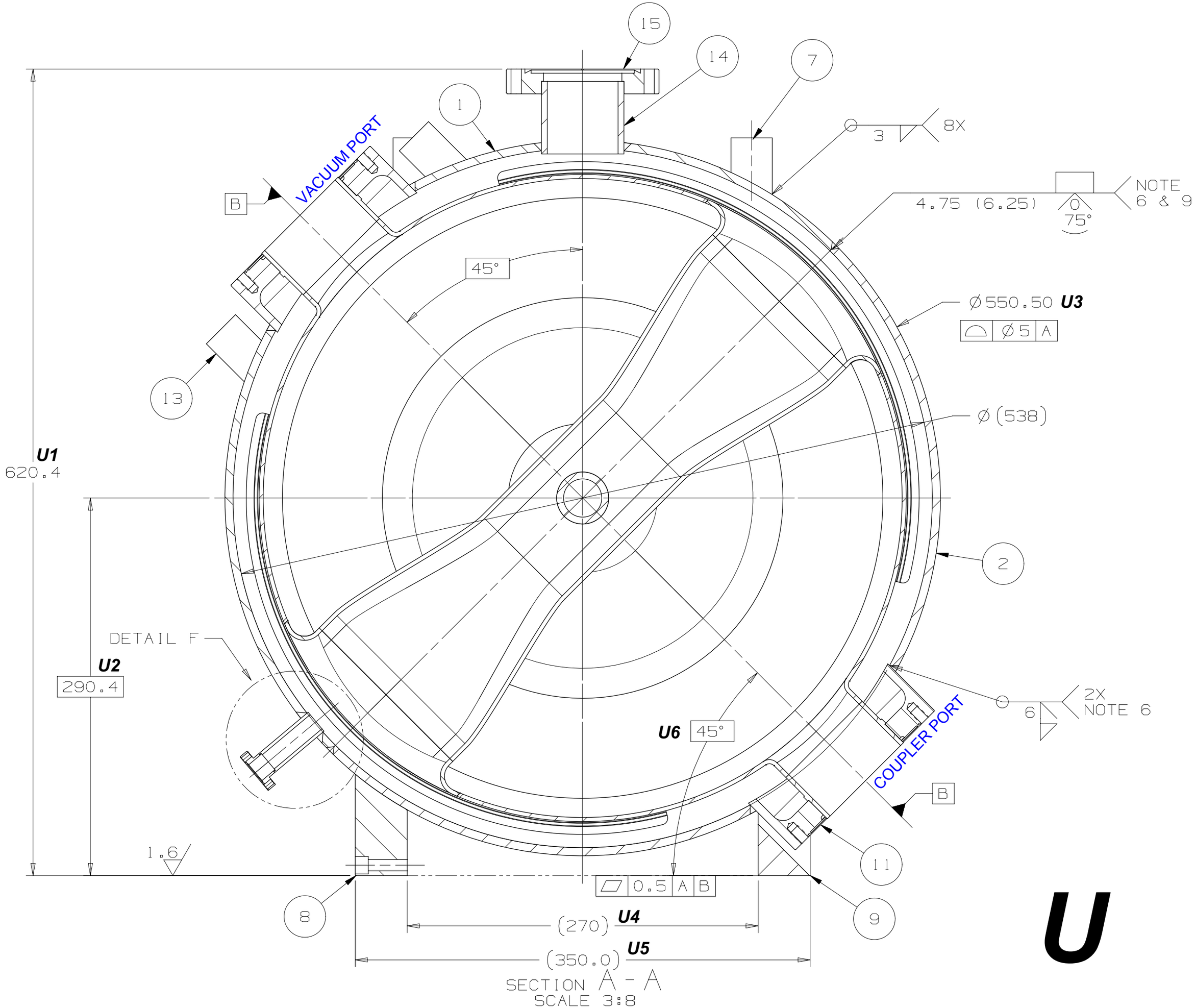
15
14
7
1
VACUUM PORT
B
3
8X
4.75 (6.25)
0
75°
NOTE
6 & 9
45°
Ø550.50 U3
Ø5 A
13
Ø(538)
U1
620.4
2
DETAIL F
U2
290.4
2X
NOTE 6
6
U6
45°
COUPLER PORT
B
1.6
11
0.5 A B
8
9
(270) U4
(350.0) U5
SECTION A - A
SCALE 3:8
U