DESCRIPTION: JACKETED SSRI CAVITY, TYPE-B
CATEGORY: WELDMENT PROJECT: PIP-II_FrontEndSSRI

REV	REVISION CONTROL DOCUMENT	DATES		SIGNATURES	
A	F00494433-A-RCD	06-Apr-2015	DRAWN	V.MARTINEZ	
		06-Apr-2015	APPROVED	D.PASSARELLI	

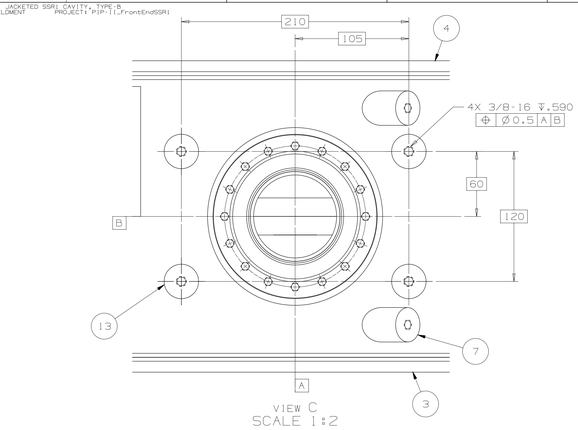

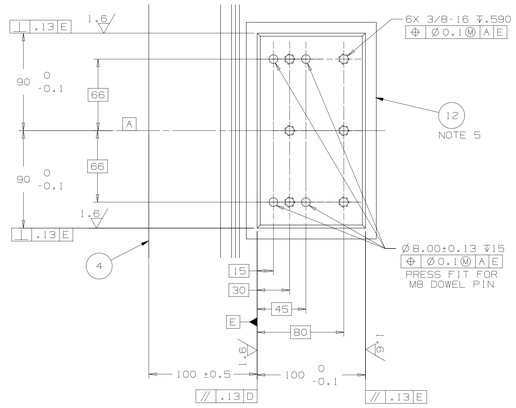

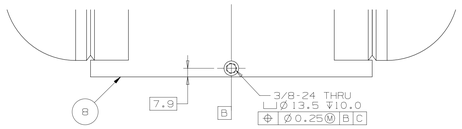

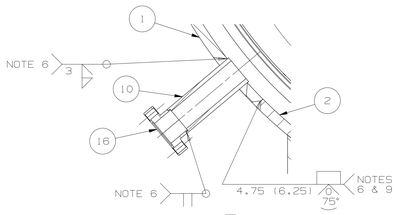

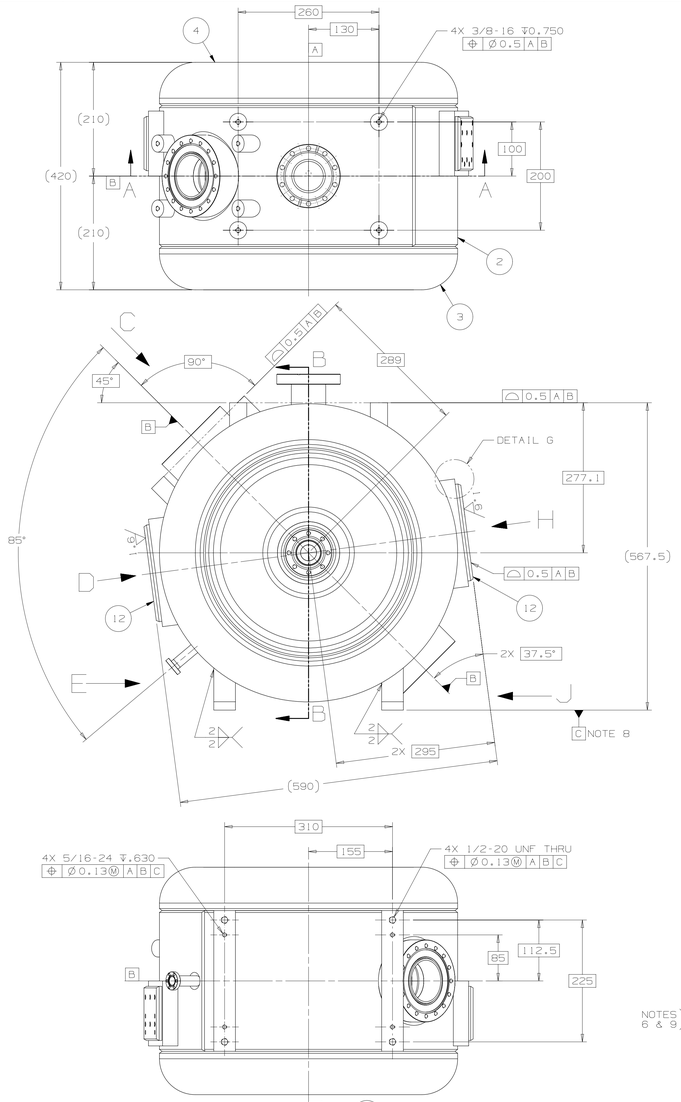

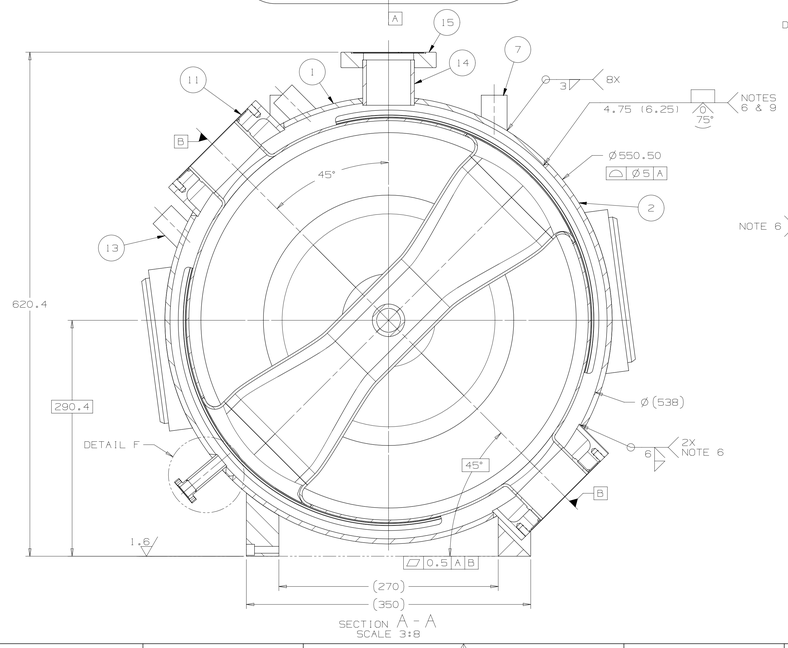

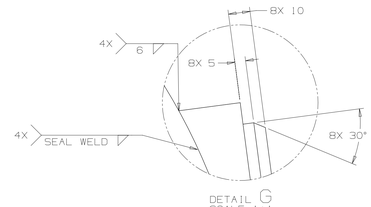

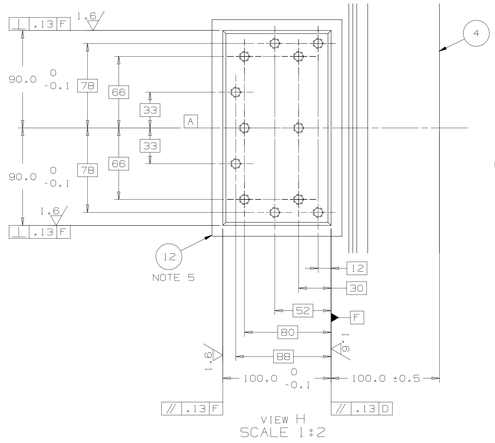

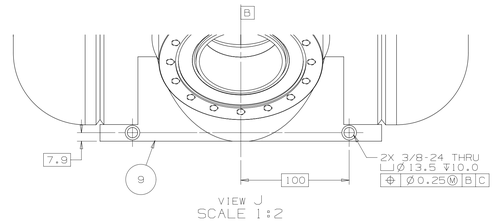

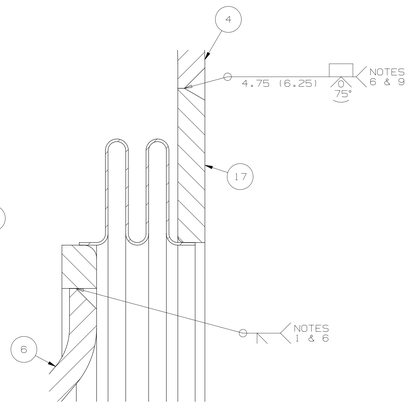

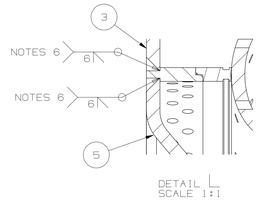

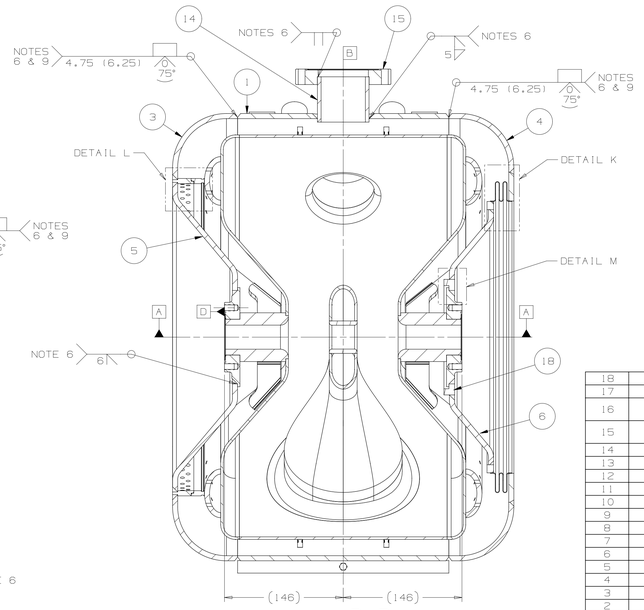

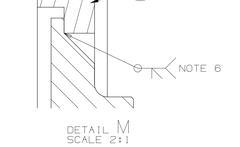

NOTES (UNLESS OTHERWISE SPECIFIED):

1. INTERIOR WELDS SHALL BE AS SMOOTH AS POSSIBLE. A FINAL GRIND MAY BE REQUIRED TO OBTAIN A SMOOTH TRANSITION.
2. WELDMENT MUST BE FREE OF DIRT, GREASE, OIL AND CHIPS.
3. SEALING SURFACES MUST BE FREE OF SCRATCHES AND NICKS WITH NO RADIAL SCORING.
4. ALL FOUR (4) PORTS ARE TO BE BLANKED OFF.
5. PERFORM FINAL MACHINING AFTER WELDING IF REQUIRED.
6. WELD TO BE VACUUM LEAK TIGHT.
   LEAK TEST: NO LEAK SHALL BE DETECTABLE ON THE MOST SENSITIVE SCALE OF A HELIUM LEAK DETECTOR WITH A MINIMUM SENSITIVITY OF 10^{-9} ATM. CC/SEC.
7. TRAILING ZEROS ON DIMENSION DENOTES TOLERANCE.
8. DATUM C TO BE DEFINED AFTER MACHINING ITEMS 8 & 9.
9. BACKING RING MUST BE USED TO PROTECT THE INTERNAL CAVITY STRUCTURE FROM DAMAGE DURING WELDING.
10. MAX. ALL MACHINED SURFACES TO BE 3.2 OTHER THEN SPECIFIED.
11. ELECTROPOLISH IS REQUIRED ON ALL PARTS BEFORE WELDING.
12. TOTAL WEIGHT : 290 LBS (130 Kg)

ITEM	PART NUMBER	DESCRIPTION	QTY
18	F00494284	ADAPTER RING BELLOWS SIDE	1
17	F10005500	BELLOWS ASSEMBLY, SSRI	1
16	FC0027370	FLANGE-CF EXT, 1.33 O.D. X .625 TUBE, NR, C, SS304	1
15	FC0042251	FLANGE-CF, 4.625 O.D. X 2.5 TUBE, NR, C, SS304	1
14	F00484875	TUBE INLET	1
13	F00484856	LUG LIFTING PORT	4
12	F00494130	TUNER SUPPORT	2
11	F00439480	SINGLE SPOKE RESONATOR	1
10	F00484822	PIPE PORT	1
9	F00484828	SUPPORT BASE - CUTOUT	1
8	F00484829	SUPPORT BASE	1
7	F00484820	LUG LIFTING	4
6	F00484823	PLATE - BELLOWS SIDE	1
5	F00484824	PLATE - RING SIDE	1
4	F00484819	DOME HEAD - BELLOWS SIDE	1
3	F00484818	DOME HEAD	1
2	F00484825	SHELL - LOWER	1
1	F00484826	SHELL - UPPER	1

PARTS LIST

UNLESS OTHERWISE SPECIFIED

±X	±X.X	±X.XX	±X/X	±X°
2	0.3	0.12	N/A	1°

BREAK ALL SHARP EDGES 0.5 MAX.
DO NOT SCALE DRAWING
DIMENSIONS BASED ON ASME Y14.5M-2009
MAX. ALL MACH SURFACES 3.2
DRAWING UNITS: MM

DRAWN	V.MARTINEZ	DATE	27-Feb-2014
CHECKED	D.PASSARELLI	DATE	17-Mar-2014
APPROVED	D.PASSARELLI	DATE	17-Mar-2014
USED ON			
MATERIAL			

GROUP: Technical Division - Design and Drafting CAGE CODE: 0U5R6

FERMI NATIONAL ACCELERATOR LABORATORY
UNITED STATES DEPARTMENT OF ENERGY

NAME: JACKETED SSRI CAVITY, TYPE-B

SCALE	SIZE	DRAWING NUMBER	SHEET	REV
AS SHOWN	A0	F00494433	1 OF 1	A