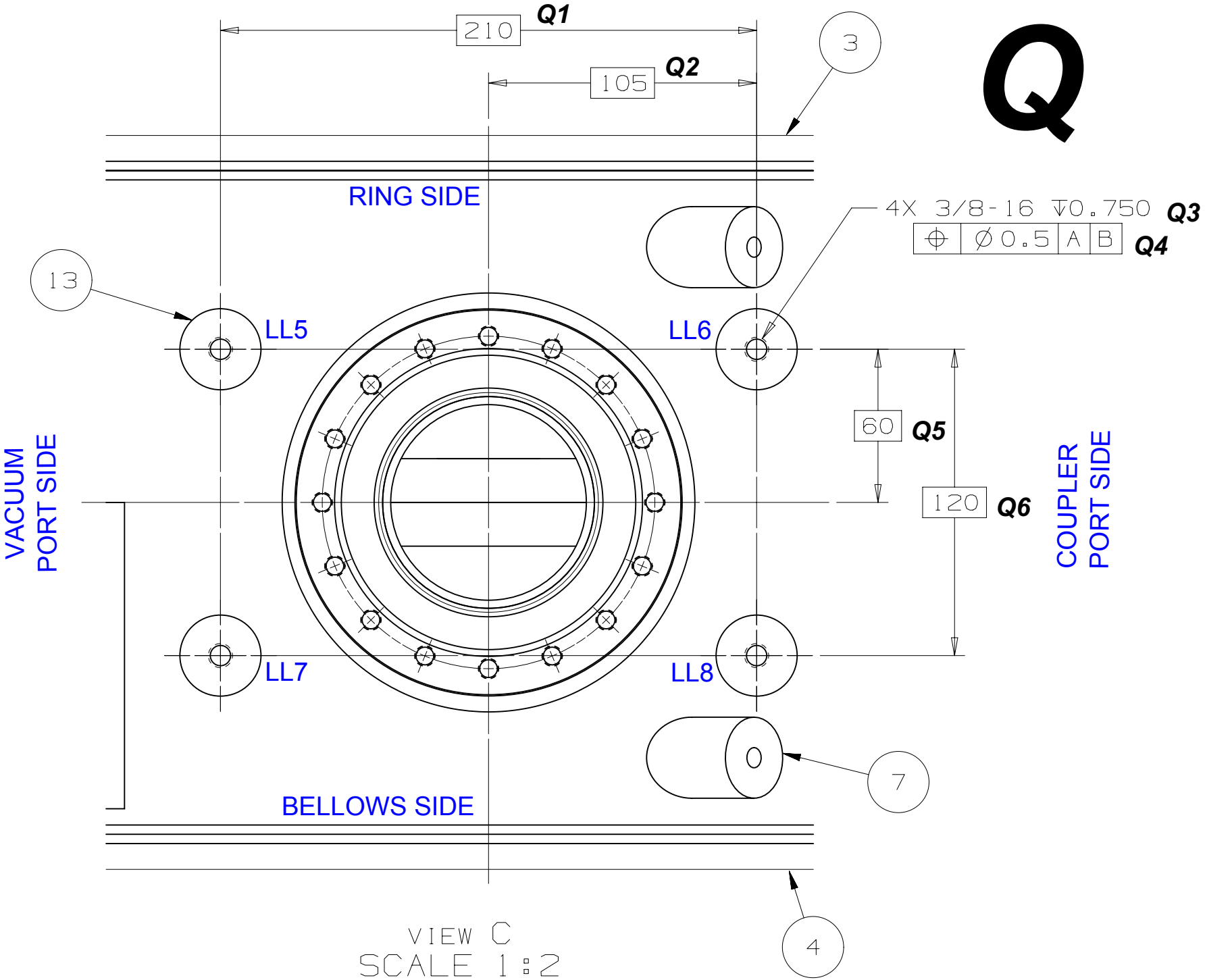
Q
210
Q1
105
Q2
3
RING SIDE
4X 3/8-16 ↧0.750
Q3
⌖ Ø0.5 A B
Q4
13
LL5
LL6
60
Q5
120
Q6
VACUUM PORT SIDE
COUPLER PORT SIDE
LL7
LL8
7
BELLOWS SIDE
4
VIEW C
SCALE 1:2