DESCRIPTION: WLDMNT,2-PHASE DS PIPE AND BELLOWS
CATEGORY: WELDMENT PROJECT: LCLSIICryogenicSystem

REV	REVISION CONTROL DOCUMENT	DATES	SIGNATURES	
-	F10060625---RCD		DRAWN	
			APPROVED	

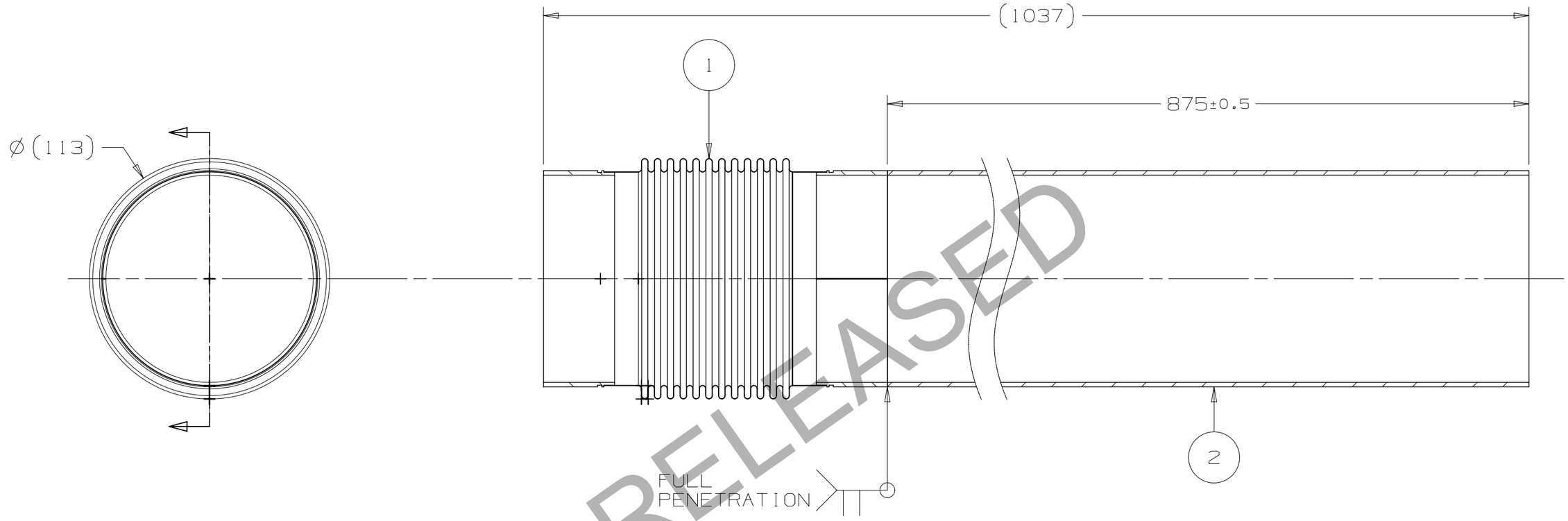

PRE-RELEASED

NOTES (UNLESS OTHERWISE SPECIFIED):

1. WELDMENT MUST BE FREE OF DIRT, GREASE, OIL AND CHIPS.
2. WELDMENT TO BE FREE OF ALL SHARP EDGES, CORNERS, AND BURRS.

ITEM	PART#	DESCRIPTION	QTY.
2	FC0052530	PIPE 2-PHASE HE, 4"OD X .083" WALL 316L SS	1
1	F10009485	WELDMENT, BELLOWS 2-PHASE PIPE	1

PARTS LIST

UNLESS OTHERWISE SPECIFIED				
±X	±X.X	±X.XX	±X/X	±X°
2	0.3	0.12	N/A	1°

BREAK ALL SHARP EDGES 0.5 MAX.
DO NOT SCALE DRAWING
DIMENSIONS BASED ON ASME Y14.5-2009
MAX. ALL MACH SURFACES 3.2
DRAWING UNITS: MM

DRAWN	M.KRAMP	DATE	10-Jun-2016
CHECKED		DATE	
APPROVED		DATE	

USED ON

MATERIAL
SEE PARTS LIST

GROUP: Technical Division - Design and Drafting | CAGE CODE: 0U5R6

FERMI NATIONAL ACCELERATOR LABORATORY
UNITED STATES DEPARTMENT OF ENERGY

NAME
WLDMNT,2-PHASE DS PIPE AND BELLOWS

SCALE	SIZE	DRAWING NUMBER	SHEET	REV
1:1	A3	F10060625	1 OF 1	-

DESCRIPTION: WLDMNT,2-PHASE IN-LINE PIPE AND BELLOWS
CATEGORY: WELDMENT PROJECT: LCLSIICryogenicSystem

REV	REVISION CONTROL DOCUMENT	DATES	SIGNATURES	
-	F10060626---RCD		DRAWN	
			APPROVED	

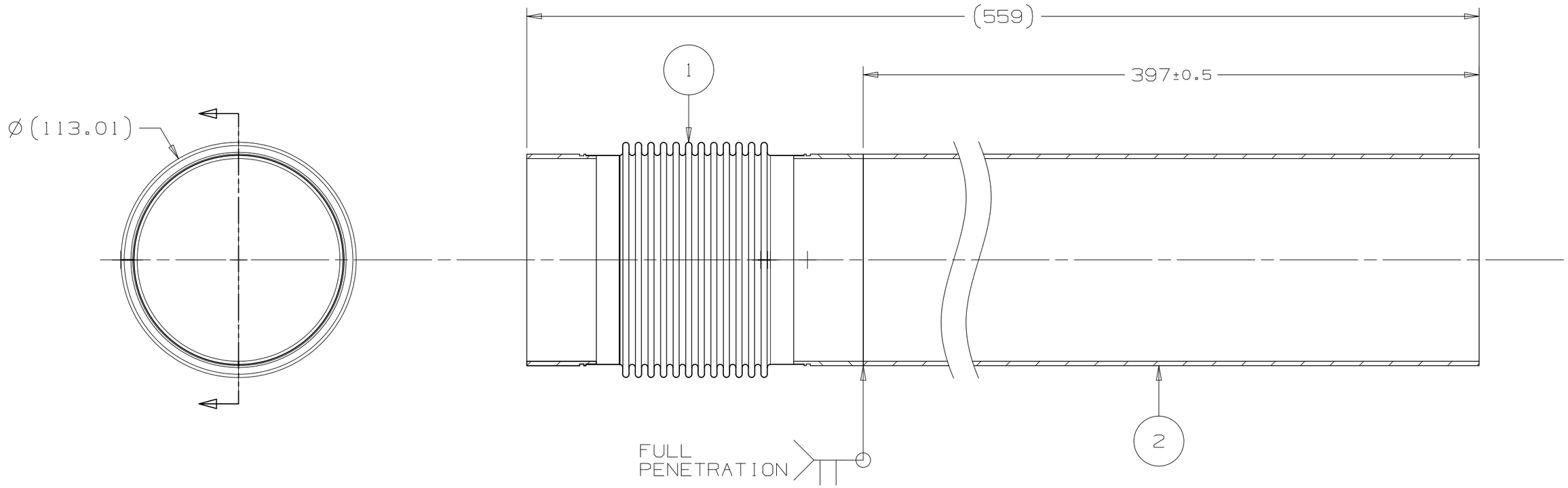

NOTES (UNLESS OTHERWISE SPECIFIED):

1. WELDMENT MUST BE FREE OF DIRT, GREASE, OIL AND CHIPS.
2. WELDMENT TO BE FREE OF ALL SHARP EDGES, CORNERS, AND BURRS.

ITEM	PART#	DESCRIPTION	QTY.
2	FC0052525	PIPE 2-PHASE HE, 4"OD X .083" WALL 316L SS	1
1	F10009485	WELDMENT, BELLOWS 2-PHASE PIPE	1

PARTS LIST

UNLESS OTHERWISE SPECIFIED				
±X	±X.X	±X.XX	±X/X	±X°
2	0.3	0.12	N/A	1°

BREAK ALL SHARP EDGES 0.5 MAX.
DO NOT SCALE DRAWING
DIMENSIONS BASED ON ASME Y14.5-2009
MAX. ALL MACH SURFACES 3.2
DRAWING UNITS: MM

DRAWN	M.KRAMP	DATE	10-Jun-2016
CHECKED		DATE	
APPROVED		DATE	

USED ON

MATERIAL
SEE PARTS LIST

GROUP: Technical Division - Design and Drafting | CAGE CODE: 0U5R6

FERMI NATIONAL ACCELERATOR LABORATORY
UNITED STATES DEPARTMENT OF ENERGY

NAME
WLDMNT,2-PHASE IN-LINE PIPE AND BELLOWS

SCALE	SIZE	DRAWING NUMBER	SHEET	REV
1:1	A3	F10060626	1 OF 1	-

DESCRIPTION: WLDMNT,2-PHASE US PIPE AND BELLOWS
CATEGORY: WELDMENT PROJECT: LCLSIICryogenicSystem

REV	REVISION CONTROL DOCUMENT	DATES	SIGNATURES	
-	F10060627---RCD		DRAWN	
			APPROVED	

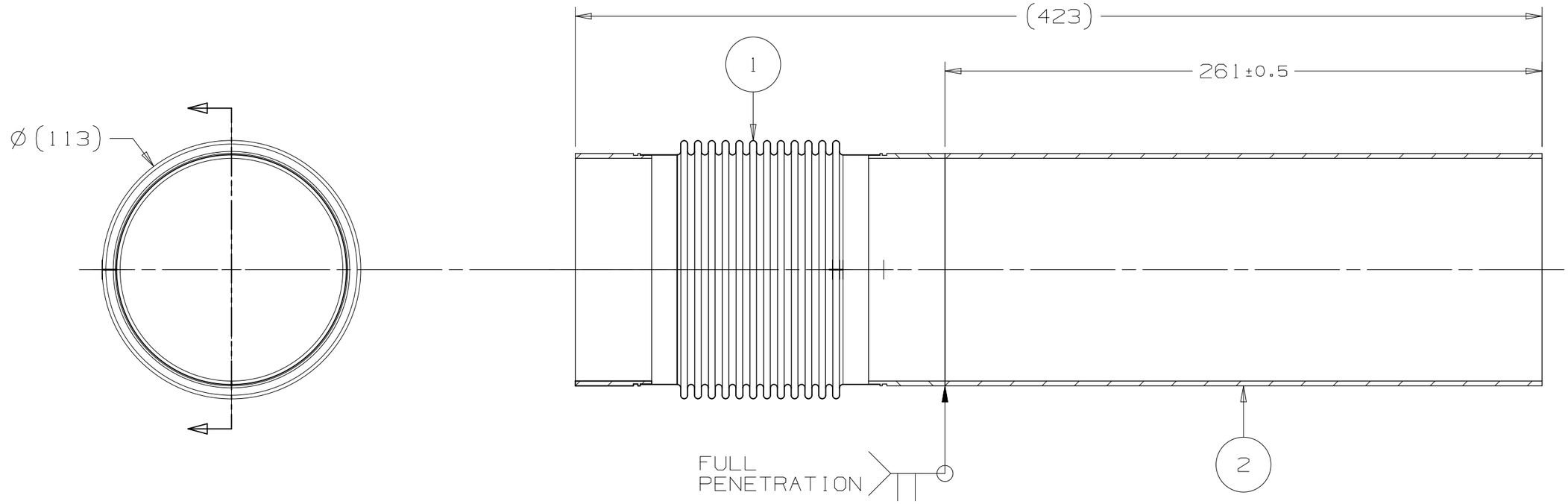

NOTES (UNLESS OTHERWISE SPECIFIED):

1. WELDMENT MUST BE FREE OF DIRT, GREASE, OIL AND CHIPS.
2. WELDMENT TO BE FREE OF ALL SHARP EDGES, CORNERS, AND BURRS.

ITEM	PART#	DESCRIPTION	QTY.
2	FC0052528	PIPE 2-PHASE HE, 4"OD X .083" WALL 316L SS	1
1	F10009485	WELDMENT, BELLOWS 2-PHASE PIPE	1

PARTS LIST

UNLESS OTHERWISE SPECIFIED				
±X	±X.X	±X.XX	±X/X	±X°
2	0.3	0.12	N/A	1°

BREAK ALL SHARP EDGES 0.5 MAX.
DO NOT SCALE DRAWING
DIMENSIONS BASED ON ASME Y14.5-2009
MAX. ALL MACH SURFACES 3.2
DRAWING UNITS: MM

DRAWN	M.KRAMP	DATE	10-Jun-2016
CHECKED		DATE	
APPROVED		DATE	

USED ON

MATERIAL

GROUP: Technical Division - Design and Drafting | CAGE CODE: 0U5R6

FERMI NATIONAL ACCELERATOR LABORATORY
UNITED STATES DEPARTMENT OF ENERGY

NAME
WLDMNT,2-PHASE US PIPE AND BELLOWS

SCALE	SIZE	DRAWING NUMBER	SHEET	REV
1:1	A3	F10060627	1 OF 1	-