END PLATES:
3"x30"x48" x 2 PCS + 3"x24"x42" x 2 PCS

TOTAL: 3"x48"x96" - 12 PLATES

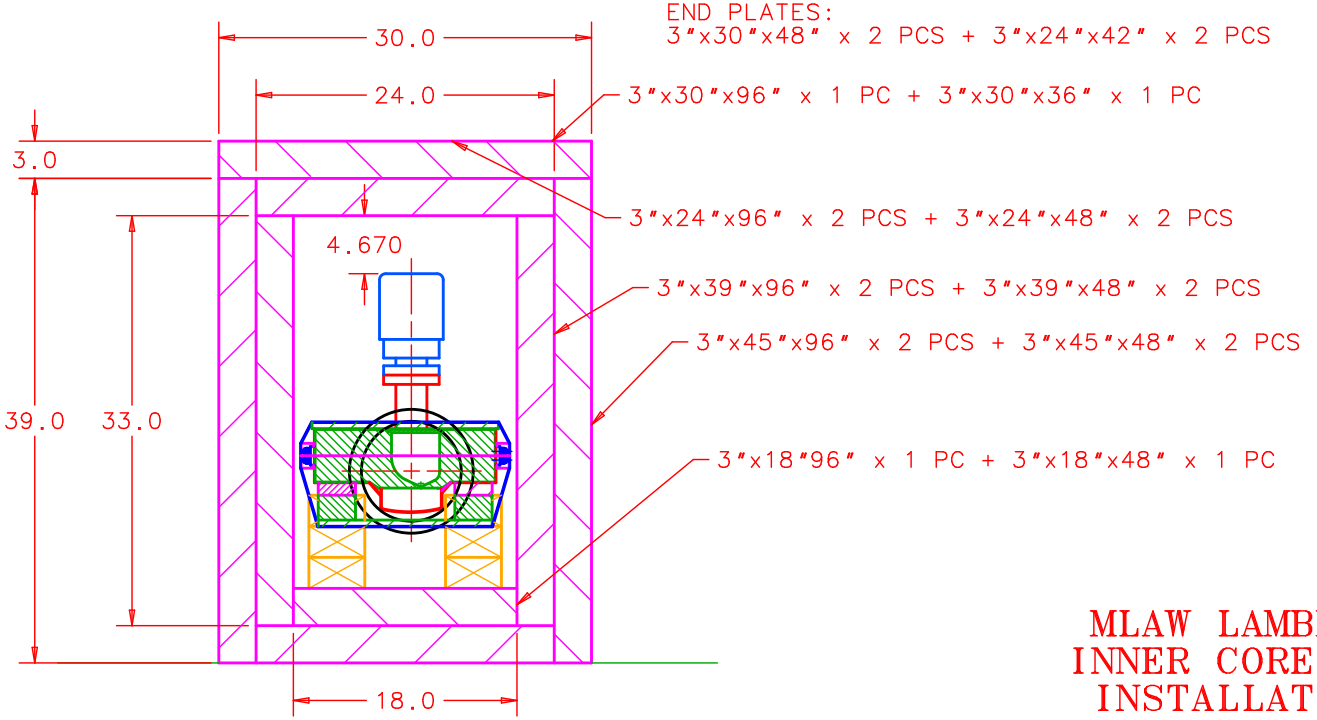
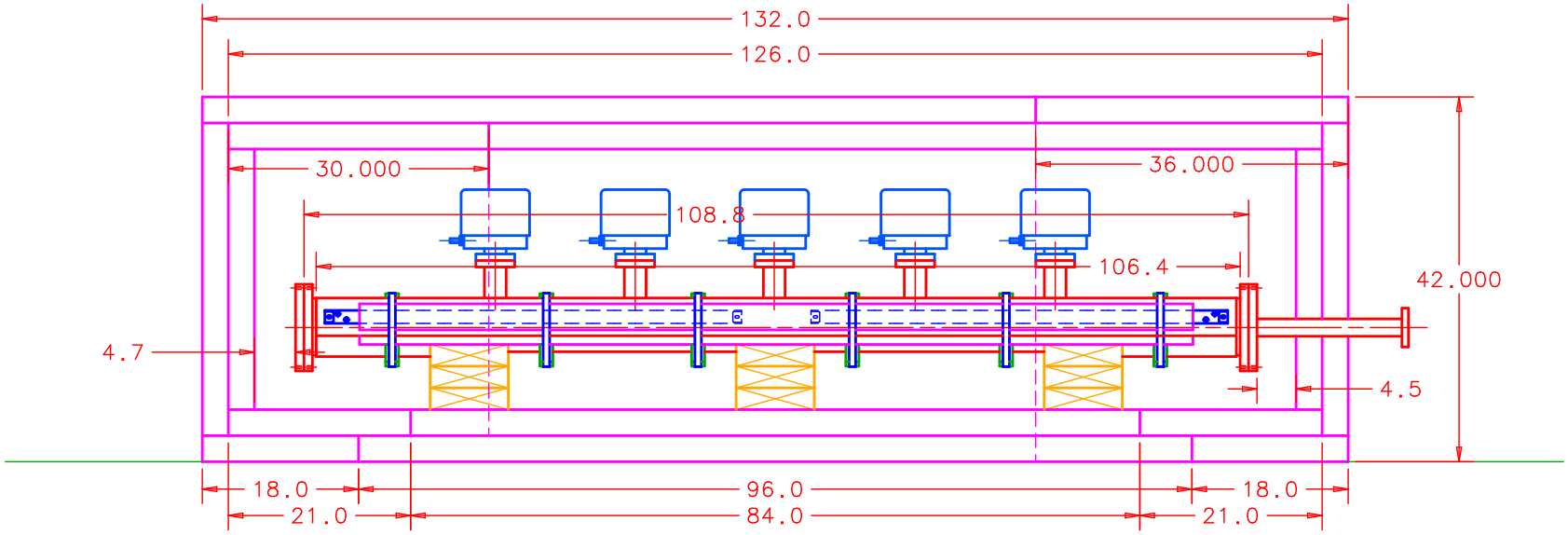
MLAW LAMBERTSON MAGNET INNER CORE VACUUM BAKING INSTALLATION AND SETUP