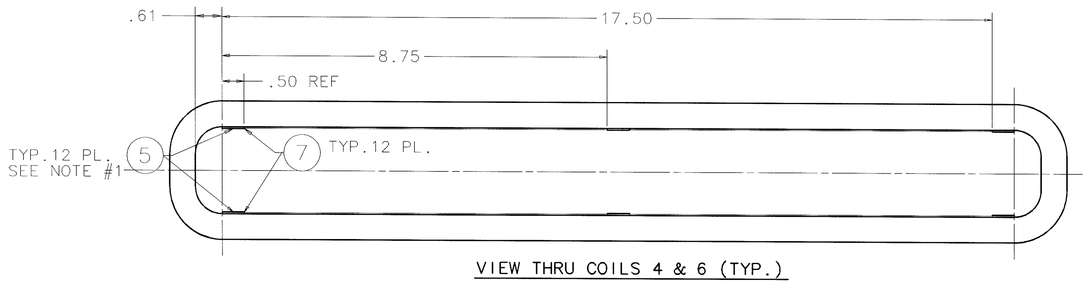

VIEW THRU COILS 4 & 6 (TYP.)

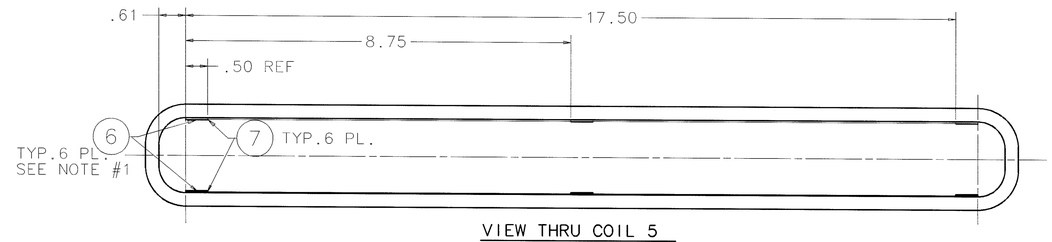

VIEW THRU COIL 5

REV.	DESCRIPTION	DRAWN / APPD.	DATE / DATE
—	NEW DRG.RELEASE EO#573	D.L.R.	7-26-93
A	ITEM 1 REV. - E.O.569	RW / NC/JM	10/13/93 / 10-18-93
B	ITEM #2 ME-318558 WAS MC-318558 ITEM #3 ME-318559 WAS MC-318559 ITEM #4 ME-318556 WAS MC-318556 ITEM #12 MA-116557 WAS MA-116500 ITEM #13 QUANTITY OF 4 WAS 2 ADDED ITEM #11 AND 15 THRU 34 REVISED NOTE 2 AND SERIAL NO. ADDED .61 DIM. 2 PLACES IDENTIFIED FIXED END REMOVED DIM. 1.912 REF.& 1.972 REF. ADDED DIM. 18.00 REF.& 2.50 REF. ADDED BRAZE NOTE AND DIM'S. THAT APPLY TO NEW ITEMS. ECO#3733	D.L.R. GEO.Z.	4-12-94 8-26-94
C	REMOVED. MA-225557, MA-331008 MB-318369, MC-318364 MB-318419, MB-331024 MA-331038, MA-331037 MA-331027, MB-331025 MB-318740, MB-318418 REMOVED DIM'S. 6.36,.06, .31 & 2.00. ADDED DIM. 1.17 MA-125283 WAS 1 PIECE DIM. 5.84 WAS 5.75 REMOVED.BRAZE NOTE & SILVER PLATING NOTE. ADDED MA-274444, MA-274445 MA-225104, MD-331155 MD-331156, MA-331171 ADDED NOTE #4 AND DIM. .31 REVISED ITEM 8 & 9 AND NOTE 2 ECO#3753	D.L.R. N.S.C.	10-12-94 11-14-94
D	ITEM 7, 5 GM WAS 310 GM ITEM 32, .015 GAL WAS 1 PT. ITEM 33, .015 GAL WAS 1 PT. ITEM 35,1.25 WAS 1.375 REMOVED: MB-318793 ECO#3790	D.L.R. GEO.Z	2-9-95 2-20-95
E	ADDED:NOTE# 5 AND ITEM MA-318765 ECO#3877	GEO.Z [illegible]	9/18/95 10/3/95

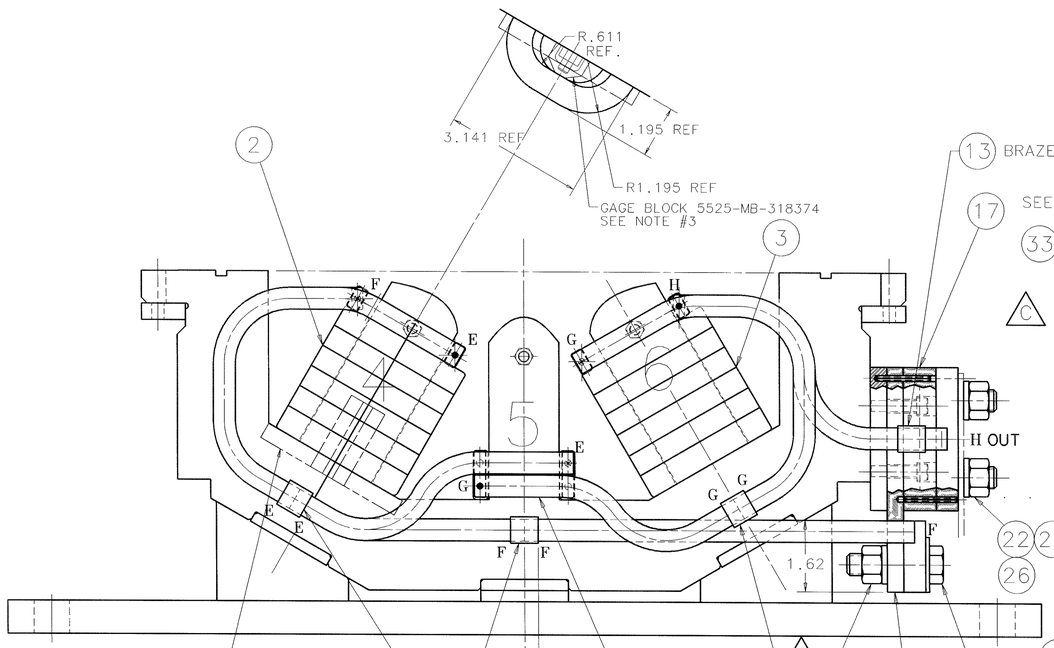

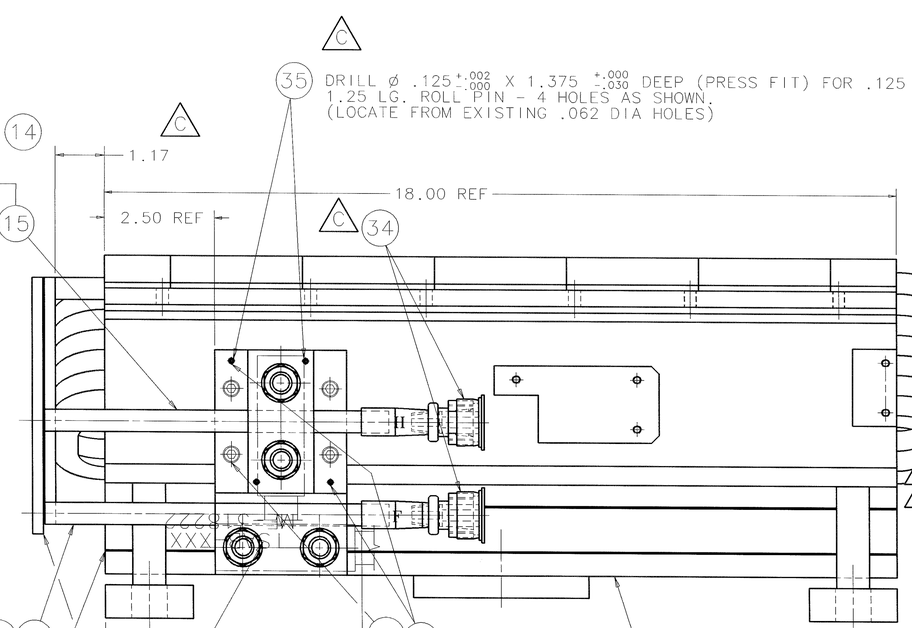

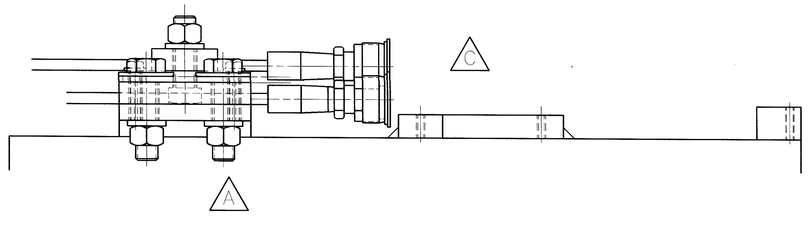

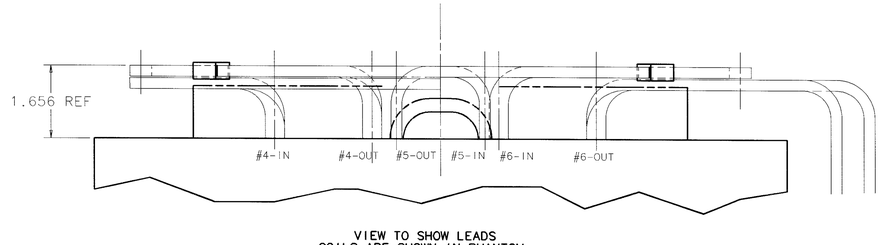

VIEW TO SHOW LEADS
COILS ARE SHOWN IN PHANTOM.

ITEM	PART NO.	DESCRIPTION OR SIZE	QTY.
E 36	MA-318765	GRAY RTV-157.2.8 OZ.TUBE	A/R
A 35	MA-331171	ROLL PIN .125 DIA. X 1.25 LG.	4
B 34	MA-125283	CAP PLUG	2
A C B 33	MA-274445	EPOXY PAINT CATALSTY	.015 GAL.
D C B 32	MA-274444	EPOXY PAINT	.015 GAL.
C B 31			
C B 30			
B 29			
C B 28	MA-225104	FIBERGLASS ADHESIVE TAPE	1 ROLL
B 27	MA-318688	PLAIN WASHER 1/2 -SS	2
B 26	MA-318687	HEX.NUT 1/2"-13 -BRASS	4
B 25	MA-318686	CONICAL COMPRESSION WASHER PART NO.8-M-89 SOLON MFG.CO.	4
C B 24			
B 23	MA-318682	SOC.HD.CAP. SCREW 1/4"-20 X 1 LG.-SS	4
B 22	MA-318681	HEX.HD.CAP.SCREW 1/2"-13 X 2"LG.-SS	4
C B 21			
C B 20	MD-331155	LEAD-#4 COIL ASSEMBLY	1
C B 19			
C B 18			
B 17	MC-318365	TERMINAL SUPPORT BLOCK	1
B 16	MB-318366	SPACER PLATE	1
C B 15	MD-331156	LEAD #6 COIL ASSEMBLY	1
14	MA-116256	BRAZING ROD	1
13	MA-318160	COPPER CONNECTOR	4
* 12	MA-116557	CAB-O-SIL	.05 KG
C B 11			
* 10	MA-116597	TUBULAR ALUMINA	2 KG
C * 9	MA-116501	EPOXY RESIN	.54 KG
C * 8	MA-116504	EPOXY RESIN	.42 KG
D 7	MA-274442	SUPER GLUE	5 GRAMS
6	MB-318376	G-10 SPACER	6
5	MB-318375	G-10 SPACER	12
4	ME-318556	SMALL COIL #5	1
3	ME-318559	LARGE COIL #6	1
2	ME-318558	LARGE COIL #4	1
1	ME-318222	LOWER HALF CORE	1

PARTS LIST

* ITEMS NOT SHOWN

NOTE:

1. SUPER GLUE ITEMS 5 & 6 G-10 SHIMS TO SIDE OF COILS LOCATED AS SHOWN IN ABOVE VIEWS.
2. (C) INSTALL COILS ITEMS 2,3 & 4 AFTER APPLYING FILLER EPOXY ON BOTH SIDES OF POLES (ENTIRE LENGTH). 3.50 HIGH ON POLE 4 & 6 AND 1.25 HIGH ON POLE 5.
3. GAUGE BLOCK MB-318374 IS TO BE USED TO LOCATE COILS ITEMS 2,3 AND 4
4. (C) WRAP (1/2 LAP) ALL COIL LEADS, UP TO COIL BODY,WITH ITEM 28-COAT WITH MIX (1:1) OF ITEMS 32 & 33.
5. (E) SUFFICIENTLY SEAL MACHINED SURFACES, HEADS OF (4) SCREWS AND (2) PINS SO MOISTURE CAN NOT PENETRATE. CURE 24 HOURS AT ROOM TEMPERATURE.

FILLED EPOXY FORMULA:(% BY WT.)

55% EPON 826 EPOXY RESIN (MA-116501 ITEM 9)
45% EM-308 EPOXY RESIN (MA-116504 ITEM 8)
200% TABULAR ALUMINA (MA-116597 ITEM 10)
~ 1.5% CAB-O-SIL (AS NEEDED TO CONTROL THICKNESS) (MA-116557 ITEM 12)

UNLESS OTHERWISE SPECIFIED			ORIGINATOR	R. WEGFORTH	6-30-93
.XX	.XXX	ANGLES	DRAWN	D.RISSMAN	6-30-93
±.03	±.010	±—	CHECKED	R. WEGFORTH	9/08/93
1. BREAK ALL SHARP EDGES .02 MAX.			APPROVED	N. CHESTER	9/13/93
2. DO NOT SCALE DRAWING.			USED ON	ME-318246	
3. DIMENSIONS BASED UPON ANSI Y14.5M-1982					
4. MAX. ALL MACH. SURFACES 125			MATERIAL	SEE ABOVE	

FERMI NATIONAL ACCELERATOR LABORATORY
UNITED STATES DEPARTMENT OF ENERGY

TECH. SUPPORT - CONVENTIONAL MAGNET
MIR SEXTUPOLE MAGNET ASSEMBLY
LOWER HALF CORE-COIL ASSEMBLY

SCALE	FILMED	DRAWING NUMBER	REV.
3/4-1"		5520-ME-318372	E

CREATED WITH I-DEAS 6.1 | USER NAME: RISSMAN